Rockford Air Devices Inc.

L & S Series Cylinders

NFPA Style Mount Cylinders

L-SERIES CYLINDER

WITH LIP TYPE PISTON SEALS

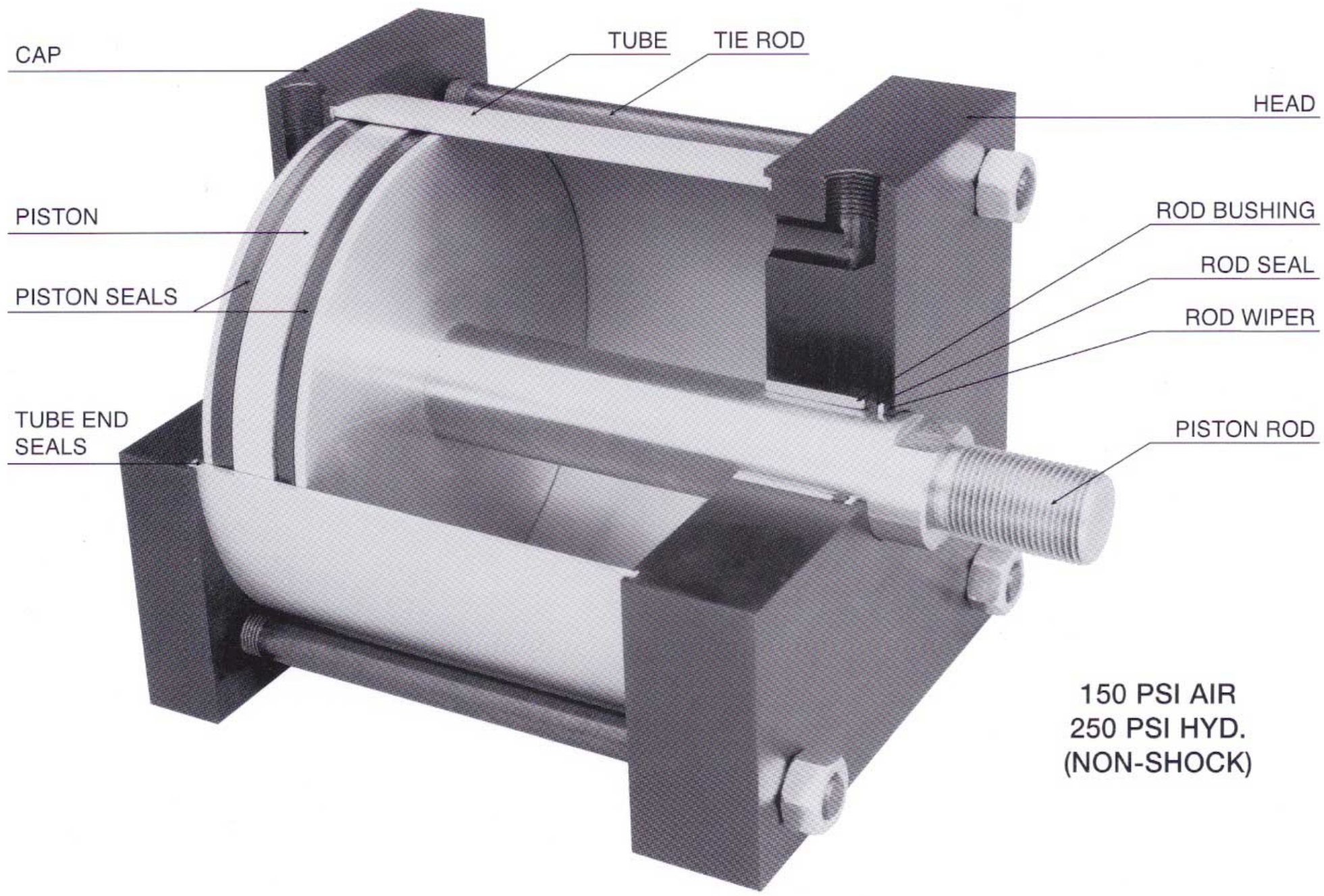

CONSTRUCTION FEATURES OF L-SERIES CYLINDERS

1. Solid die cast aluminum alloy is used for heads and caps on 1-1/2" through 4" bore and then anodized for corrosion resistance. Heads and caps of 5", 6", and 8" are made from 6061-T651 solid wrought aluminum.
2. Aluminum alloy tube 6063-T832 of 35,000 PSI that is hard coated on I.D. for file hard resistance to scoring and wear, yet light in weight.
3. Aluminum alloy piston for light weight and excellent friction characteristics against hard coated tube I.D.
4. Cast iron rod bushing that is compatible with hard chrome plated piston rod.
5. Hard chrome plated ground and polished piston rod of 100,000 PSI minimum yield.
6. Tie rods of high strength steel to maintain compression on tube end seals.
7. Lip type piston seals are of Buna "N". They are pressure sensitive and wear compensating to give low friction and long life. These seals should be used in high cycle applications and long stroke applications.
8. Rod seal is of quad ring design. It requires lower squeeze than an o-ring for positive sealing. This four lobed seal provides low friction in dynamic applications and longer life.
9. Tube end seals of fiber and nitrile base elastomer as a binder.
10. All sliding surfaces are lubricated with a teflon base, low friction long lasting grease.
11. Teflon back-up washer for rod seal helps wipe piston rod clean on return stroke.

L-SERIES CYLINDER

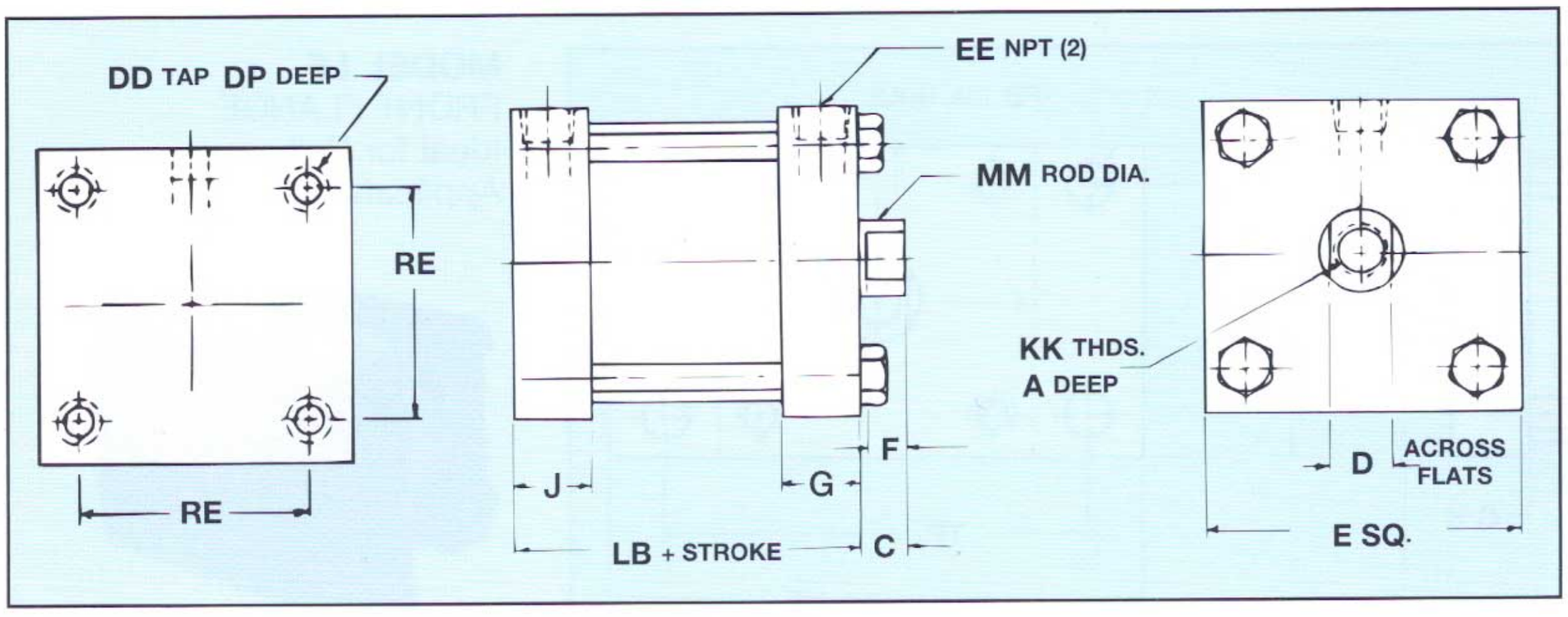

MODEL L
Basic Cylinder
Has Nuts at
Head End.
Nuts at Cap End
Also Available.

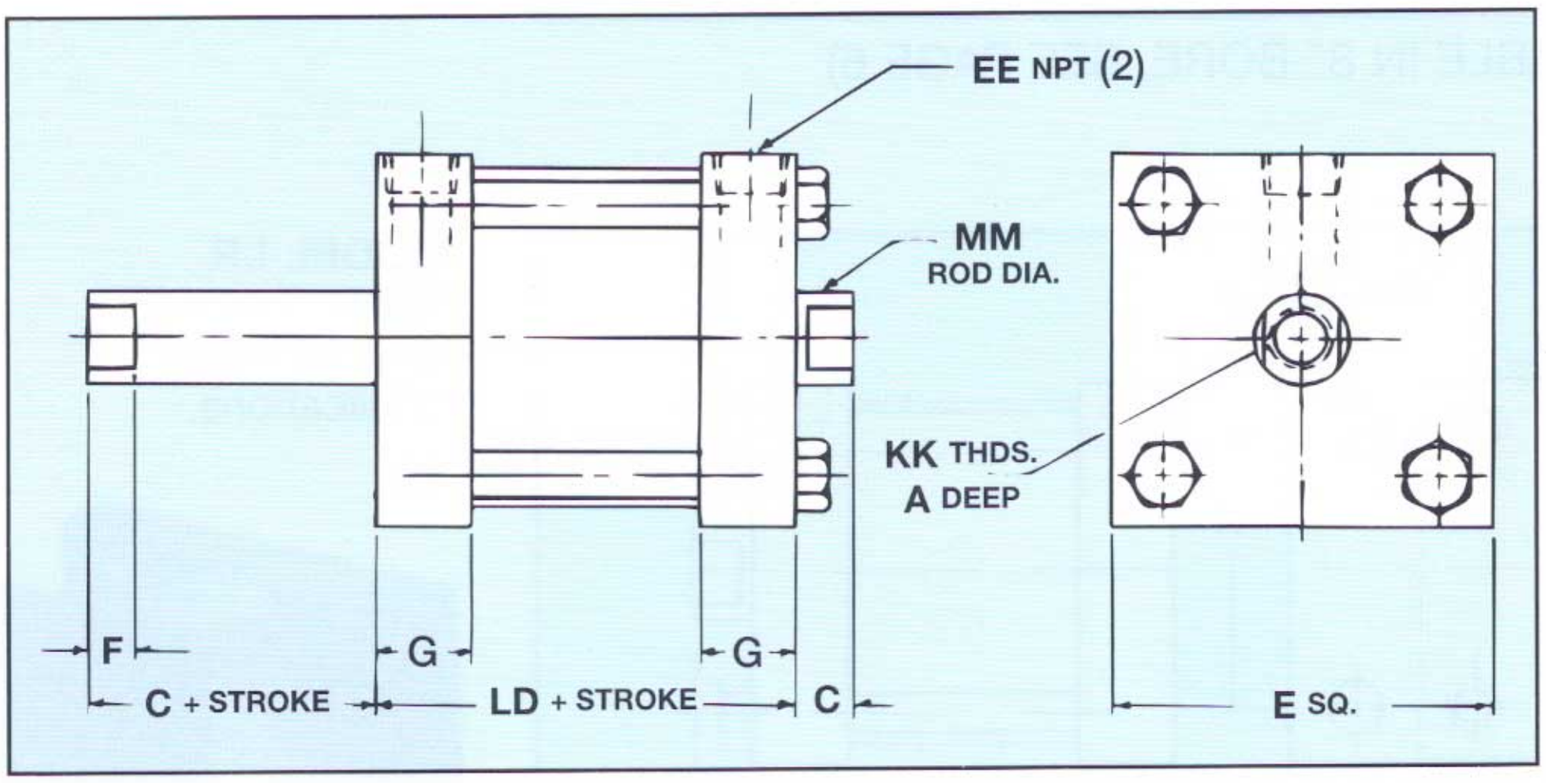

MODEL LD
Double Rod End
Cylinder

DOUBLE ROD END CYLINDER

DOUBLE ROD END CYLINDERS ARE DESIGNATED BY ADDING LETTER "D". (i.e. LFD, LTD, etc.)
AVAILABLE IN ALL MODELS EXCEPT MODEL "LC"

BASIC AND DOUBLE ROD END CYLINDER DIMENSIONS

BORE	A	C	D	DD	DP	E	F	G	J	EE	KK	LB	LD	MM	RE
1-1/2	5/8	3/8	1/2	1/4-28	5/16	2	5/16	5/8	5/8	1/8	3/8-24	2-1/4	2-1/4	5/8	1.43
2	5/8	3/8	1/2	5/16-24	5/16	2-1/2	5/16	5/8	5/8	1/8	3/8-24	2-1/4	2-1/4	5/8	1.84
2-1/2	5/8	3/8	1/2	5/16-24	5/16	3	5/16	5/8	5/8	1/8	3/8-24	2-1/4	2-1/4	5/8	2.19
3-1/4	7/8	1/2	13/16	7/16-20	7/16	3-3/4	7/16	7/8	7/8	1/4	5/8-18	3	3	1	2.94
4	7/8	1/2	13/16	7/16-20	7/16	4-1/2	7/16	7/8	7/8	1/4	5/8-18	3	3	1	3.56
5	7/8	1/2	13/16	1/2-20	1/2	5-1/2	7/16	1	1	3/8	5/8-18	3-1/4	3-1/4	1	4.10
6	1-5/8	5/8	1-1/8	1/2-20	1/2	6-1/2	1/2	1-1/2	1	3/8	1-14	3-7/8	4-3/8	1-3/8	4.88
8	1-5/8	5/8	1-1/8	5/8-18	1/2	8-1/2	1/2	1-1/2	1	3/8	1-14	3-7/8	4-3/8	1-3/8	6.44

FLANGE MOUNTS

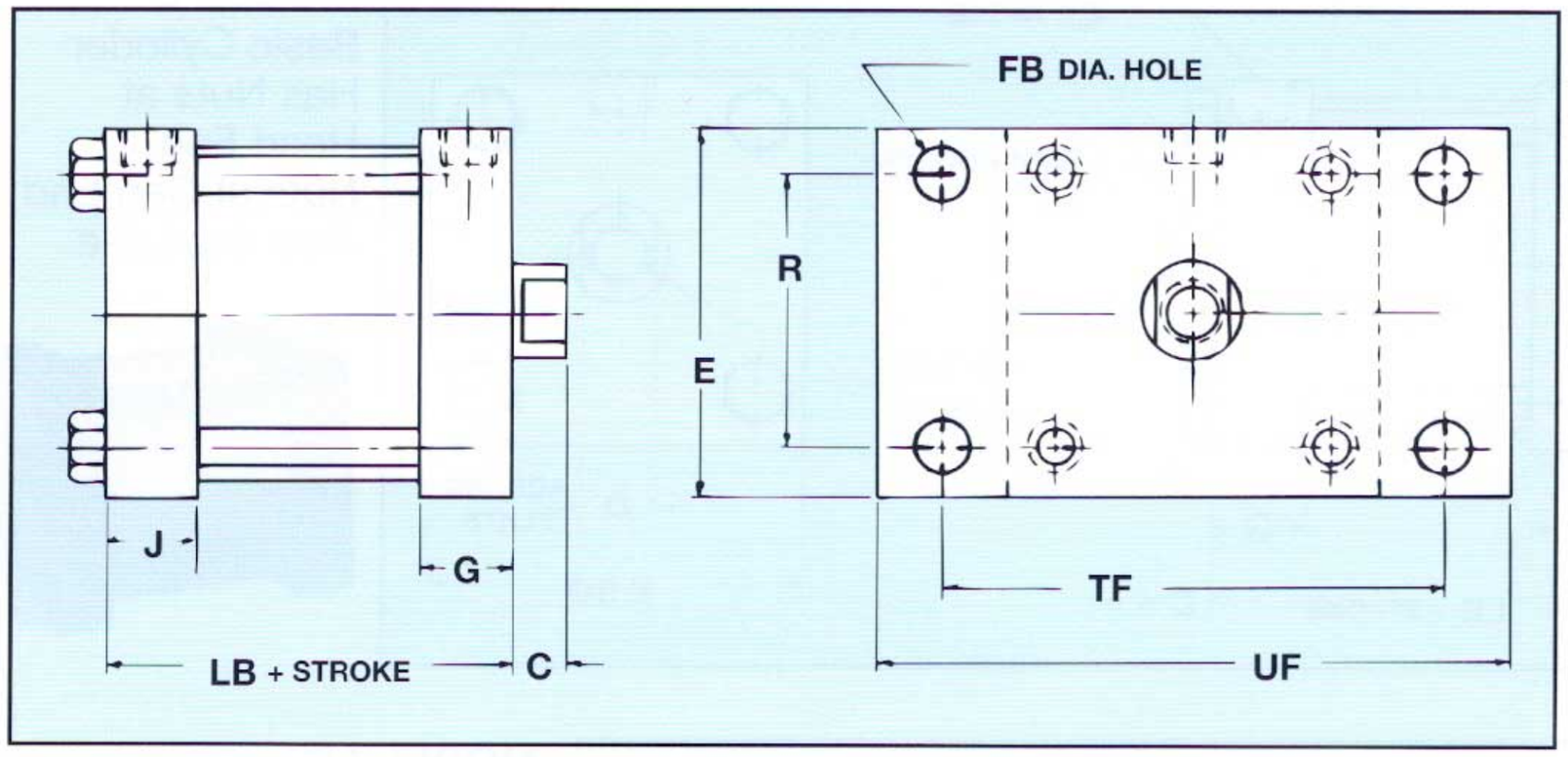

(NOT AVAILABLE IN 8" BORE, SEE PAGE 6)

MODEL LF
FRONT FLANGE
Ideal for Pull Applications.

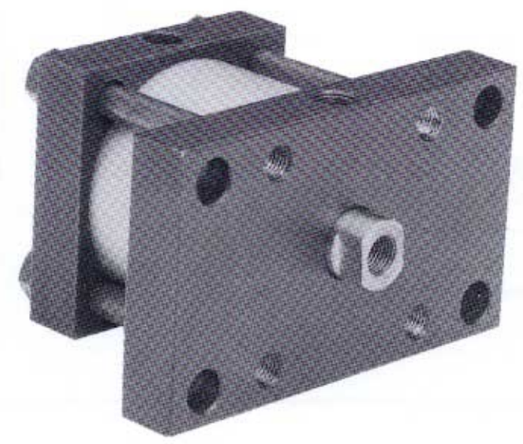

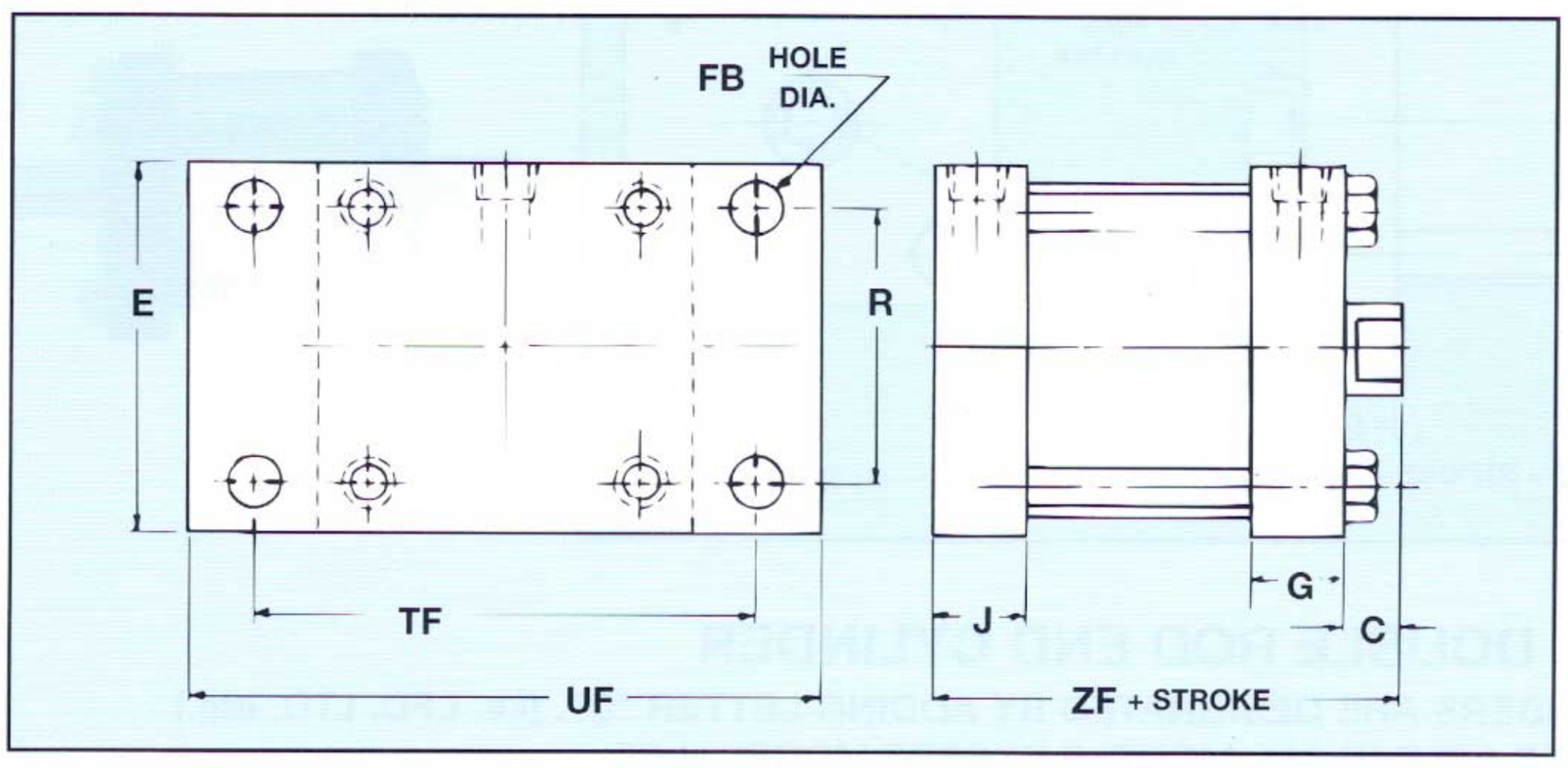

(NOT AVAILABLE IN 8" BORE, SEE PAGE 6)

MODEL LR
REAR FLANGE
Ideal for Push Applications.

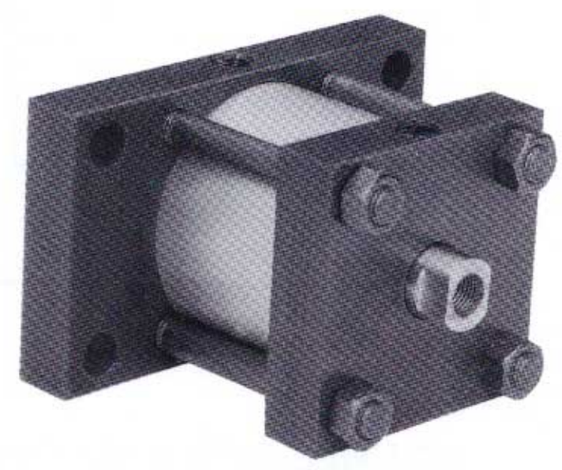

DIMENSIONS

BORE	ROD DIA.	C	E	G	J	R	FB	LB	TF	UF	ZF
1-1/2	5/8	3/8	2	5/8	5/8	1.43	5/16	2-1/4	2-3/4	3-3/8	2-5/8
2	5/8	3/8	2-1/2	5/8	5/8	1.84	3/8	2-1/4	3-3/8	4-1/8	2-5/8
2-1/2	5/8	3/8	3	5/8	5/8	2.19	3/8	2-1/4	3-7/8	4-5/8	2-5/8
3-1/4	1	1/2	3-3/4	7/8	7/8	2.76	7/16	3	4-11/16	5-1/2	3-1/2
4	1	1/2	4-1/2	7/8	7/8	3.32	7/16	3	5-7/16	6-1/4	3-1/2
5	1	1/2	5-1/2	1	1	4.10	9/16	3-1/4	6-5/8	7-5/8	3-3/4
6	1-3/8	5/8	6-1/2	1-1/2	1	4.88	9/16	3-7/8	7-5/8	8-5/8	4-1/2

BOTTOM TAP AND BOTTOM BAR MOUNTS

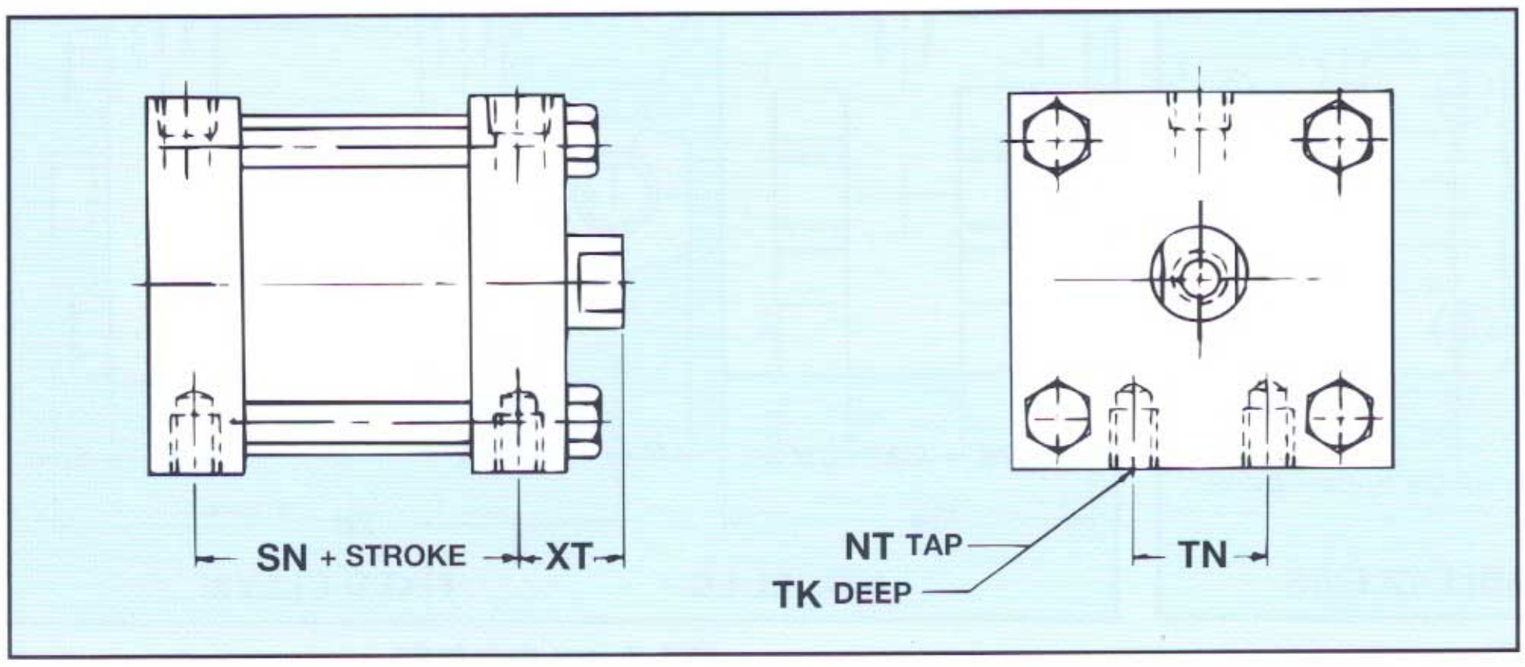

MODEL LT
BOTTOM TAP
For Mounting
From Under
Cylinder.

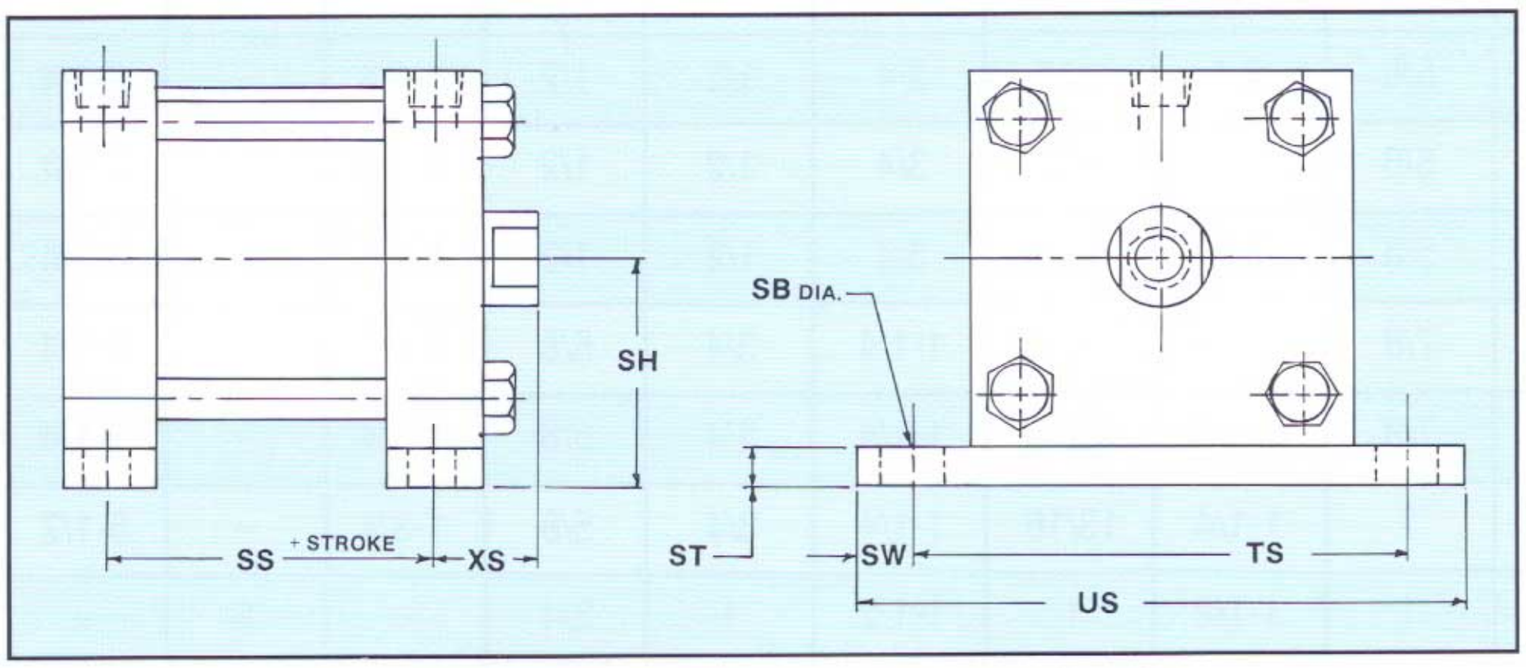

(NOT AVAILABLE IN 6" & 8" BORE)

MODEL LB
BOTTOM BAR
For Mounting
From Side of
Cylinder.

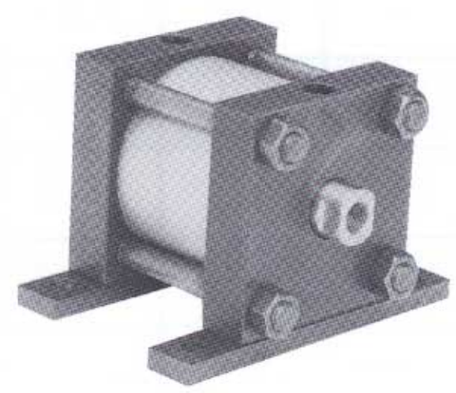

DIMENSIONS

BORE	ROD DIA.	NT	SB	SH	SN	SS	ST	SW	TK	TN	TS	US	XS	XT
1-1/2	5/8	1/4-20	5/16	1-1/4	1-5/8	1-5/8	1/4	3/8	3/8	5/8	2-3/4	3-1/2	11/16	11/16
2	5/8	1/4-20	5/16	1-1/2	1-5/8	1-5/8	1/4	3/8	3/8	7/8	3-1/4	4	11/16	11/16
2-1/2	5/8	5/16-18	3/8	1-13/16	1-9/16	1-9/16	5/16	3/8	1/2	1-1/4	3-3/4	4-1/2	23/32	23/32
3-1/4	1	3/8-16	1/2	2-3/8	2	2	1/2	1/2	5/8	1-1/2	4-3/4	5-3/4	1	1
4	1	3/8-16	1/2	2-3/4	2	2	1/2	1/2	5/8	2-1/16	5-1/2	6-1/2	1	1
5	1	1/2-13	1/2	3-1/4	2-1/4	2-1/4	1/2	1/2	3/4	2-11/16	6-1/2	7-1/2	1	1
6	1-3/8	5/8-11	–	–	2-3/8	–	–	–	1	3-1/4	–	–	–	1-5/8
8	1-3/8	5/8-11	–	–	2-3/8	–	–	–	1	4-1/2	–	–	–	1-5/8

CLEVIS MOUNTS

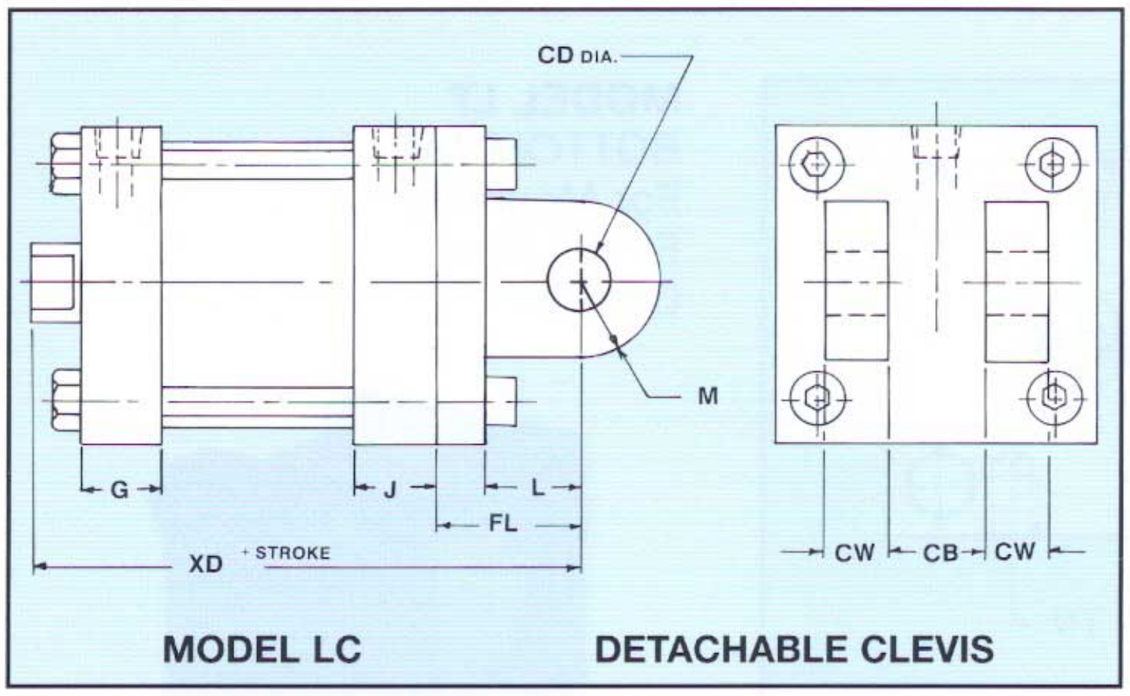

(1-1/2" – 5" BORES)

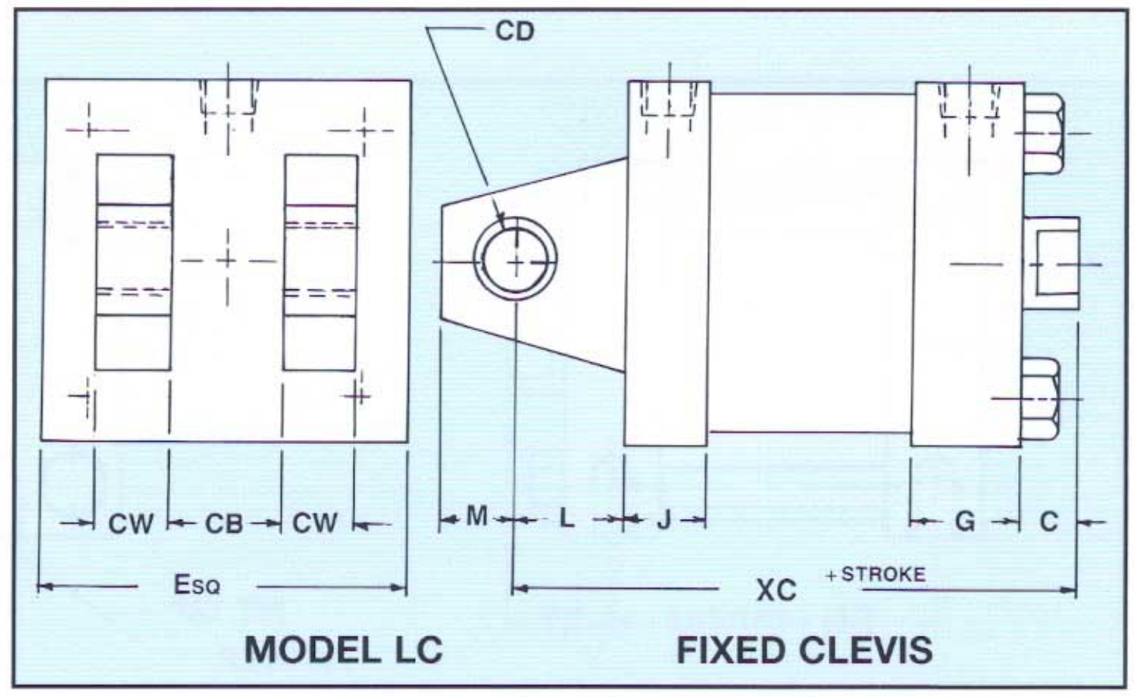

(6" & 8" BORE)

DIMENSIONS

BORE	ROD DIA.	C	E	G	J	L	M	CB	CD	CW	FL	XC	XD
1-1/2	5/8	3/8	2	5/8	5/8	3/4	9/16	3/4	1/2	1/2	1-1/8	–	3-3/4
2	5/8	3/8	2-1/2	5/8	5/8	3/4	9/16	3/4	1/2	1/2	1-1/8	–	3-3/4
2-1/2	5/8	3/8	3	5/8	5/8	3/4	9/16	3/4	1/2	1/2	1-1/8	–	3-3/4
3-1/4	1	1/2	3-3/4	7/8	7/8	1-1/4	13/16	1-1/4	3/4	5/8	1-3/4	–	5-1/4
4	1	1/2	4-1/2	7/8	7/8	1-1/4	13/16	1-1/4	3/4	5/8	1-3/4	–	5-1/4
5	1	1/2	5-1/2	1	1	1-1/4	13/16	1-1/4	3/4	5/8	1-3/4	–	5-1/2
6	1-3/8	5/8	6-1/2	1-1/2	1	1-1/2	1	1-1/2	1	3/4	–	6	–
8	1-3/8	5/8	8-1/2	1-1/2	1	1-1/2	1	1-1/2	1	3/4	–	6	–

HEAD AND CAP MOUNTS

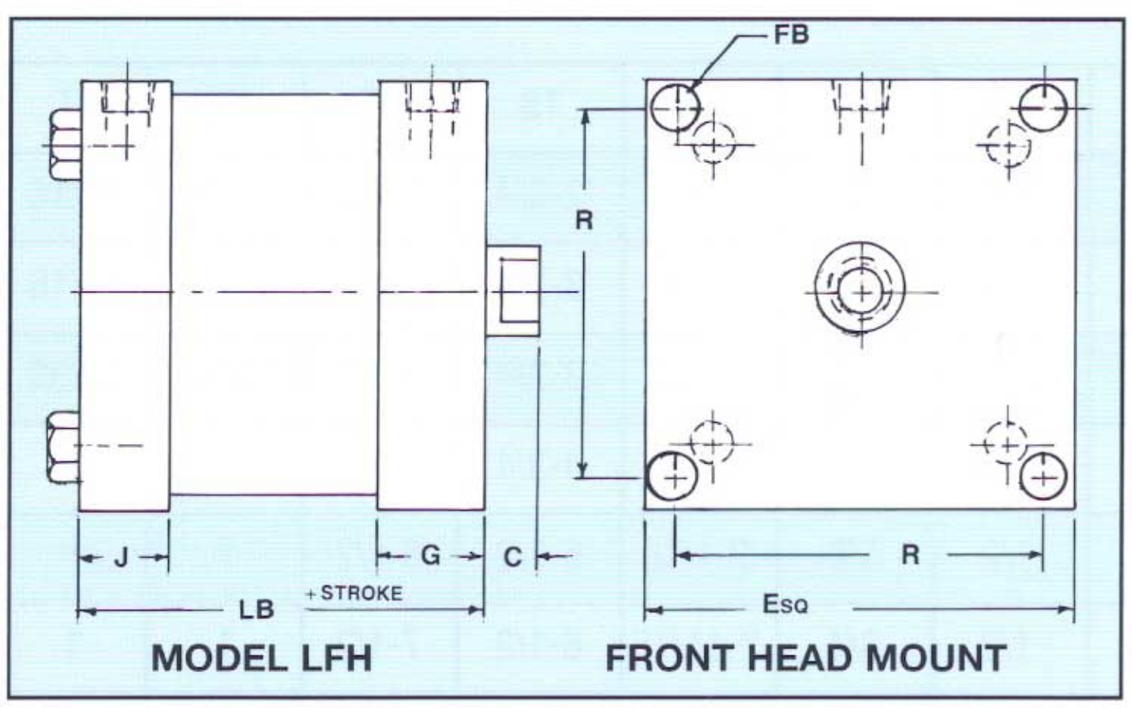

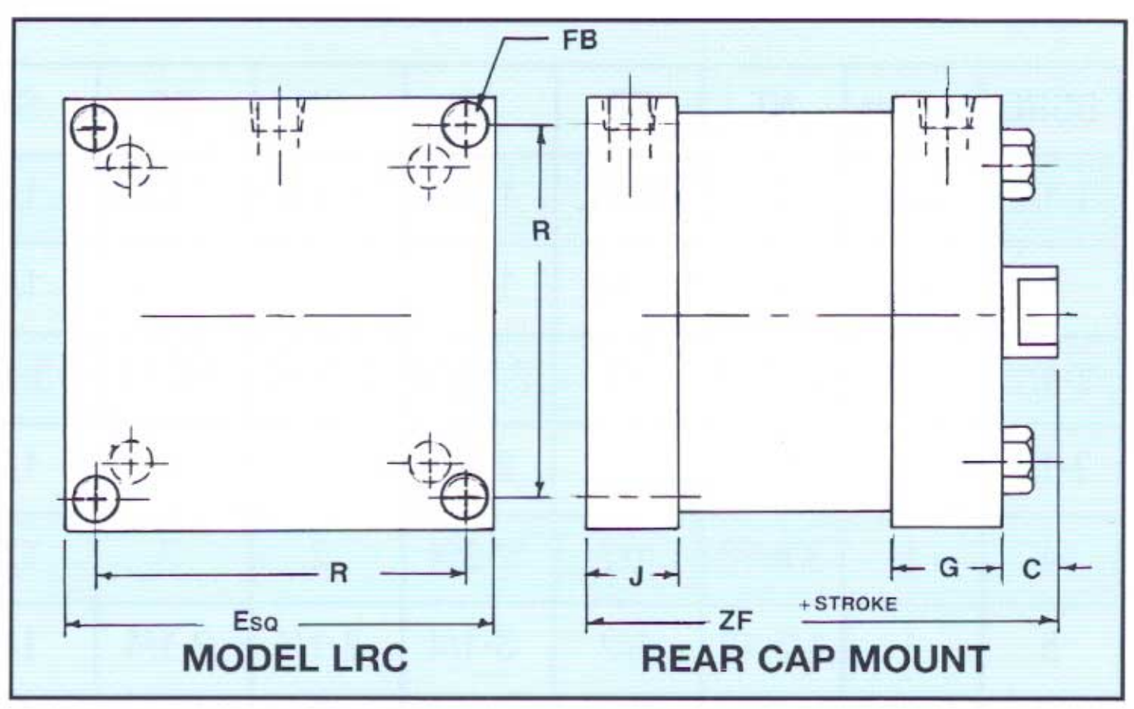

8" BORE ONLY DIMENSIONS

BORE	ROD DIA.	C	E	G	J	R	FB	LB	ZF
8	1-3/8	5/8	8-1/2	1-1/2	1	7.57	11/16	3-7/8	4-1/2

EXTENDED TIE ROD

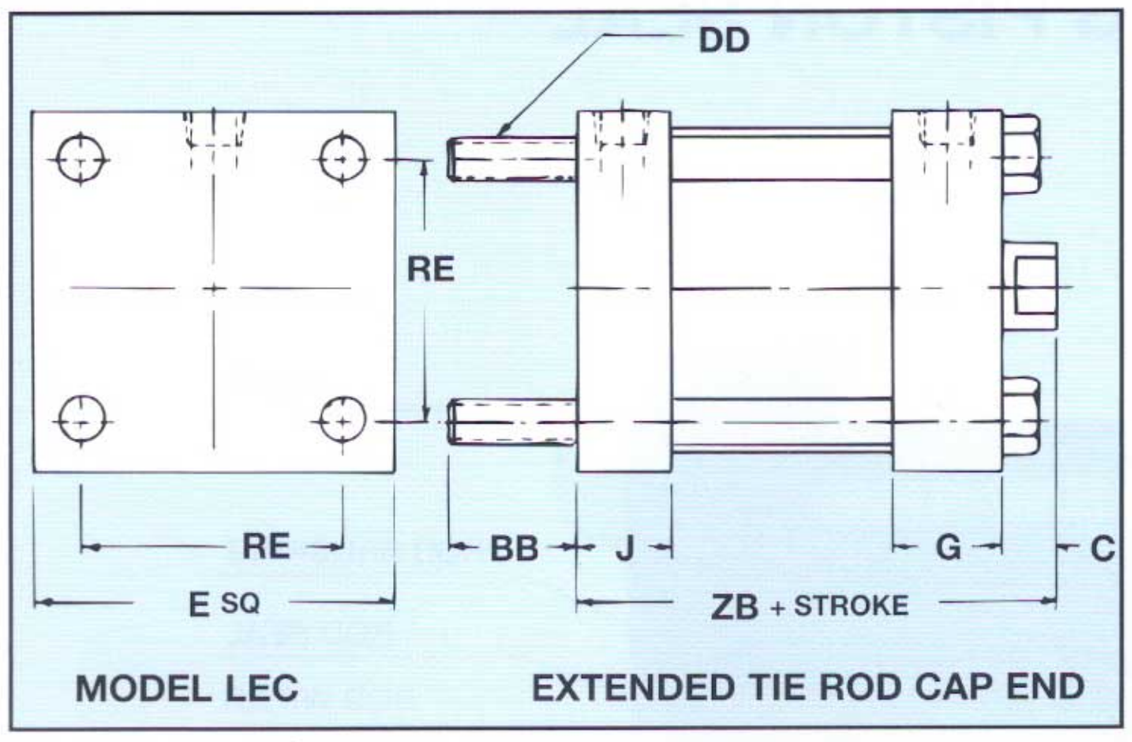

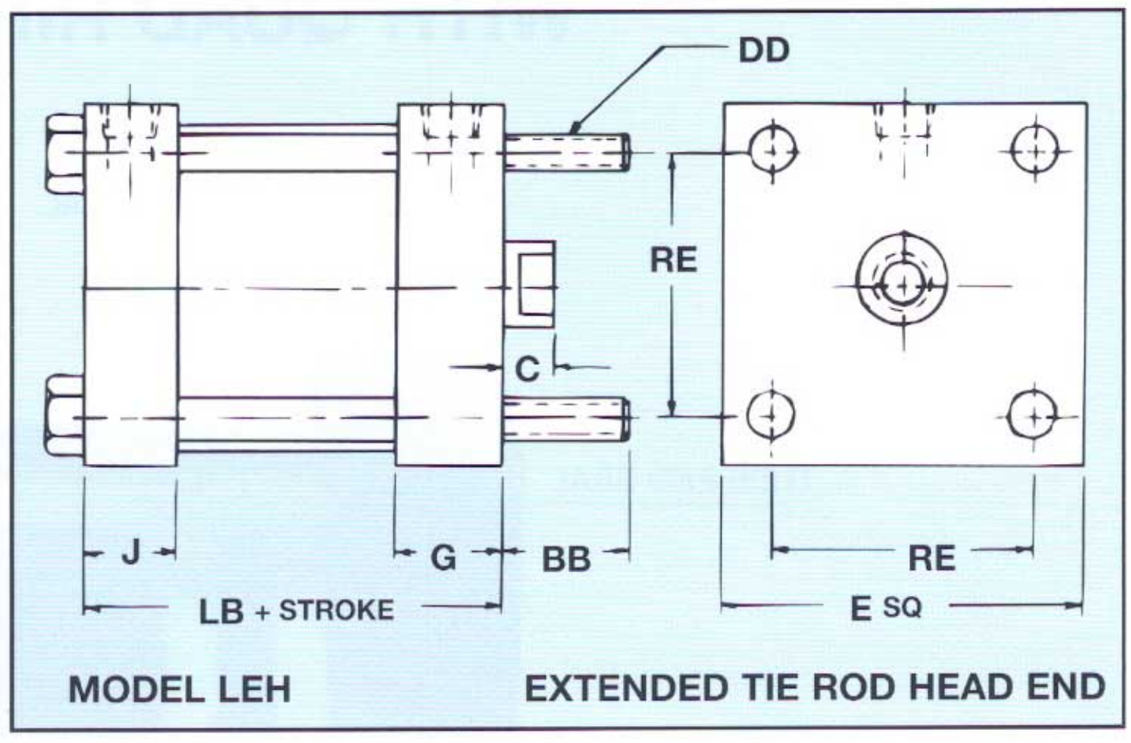

DIMENSIONS

BORE	ROD DIA.	C	E	G	J	BB	DD	LB	RE	ZB
1-1/2	5/8	3/8	2	5/8	5/8	7/8	1/4-28	2-1/4	1.43	2-5/8
2	5/8	3/8	2-1/2	5/8	5/8	1	5/16-24	2-1/4	1.84	2-5/8
2-1/2	5/8	3/8	3	5/8	5/8	1	5/16-24	2-1/4	2.19	2-5/8
3-1/4	1	1/2	3-3/4	7/8	7/8	1-1/4	*7/16-20	3	*2.94	3-1/2
4	1	1/2	4-1/2	7/8	7/8	1-1/4	*7/16-20	3	*3.56	3-1/2
5	1	1/2	5-1/2	1	1	1-1/2	1/2-20	3-1/4	4.10	3-3/4
6	1-3/8	5/8	6-1/2	1-1/2	1	1-1/2	1/2-20	3-7/8	4.88	4-1/2
8	1-3/8	5/8	8-1/2	1-1/2	1	1-3/4	5/8-18	3-7/8	6.44	4-1/2

*Larger than other NFPA style cylinders

ORDERING INFORMATION FOR L-SERIES

1. Specify quantity
2. Specify model
3. Specify bore and stroke
4. Specify accessories (if needed)
5. Specify operating pressure and medium

EXAMPLE: (3) Model LF 2" Bore x 1/2" Stroke
100 PSI AIR

Stock stroke lengths are 1/2, 1, 1-1/2, 2, 2-1/2, 3, 3-1/2, 4, 4-1/2, 5, 5-1/2, 6 on 1-1/2" through 5" bores. Other stroke lengths are considered Non-Stock and subject to price additions.

NOTE: On 6" & 8" bore cylinders, all strokes are made to order.

AVAILABLE OPTIONS

Altered rod extension
Stainless piston rods, tie rods & nuts
Viton seals
Magnetic pistons & reed switches
Port location

S-SERIES CYLINDER
WITH QUAD RING PISTON SEAL

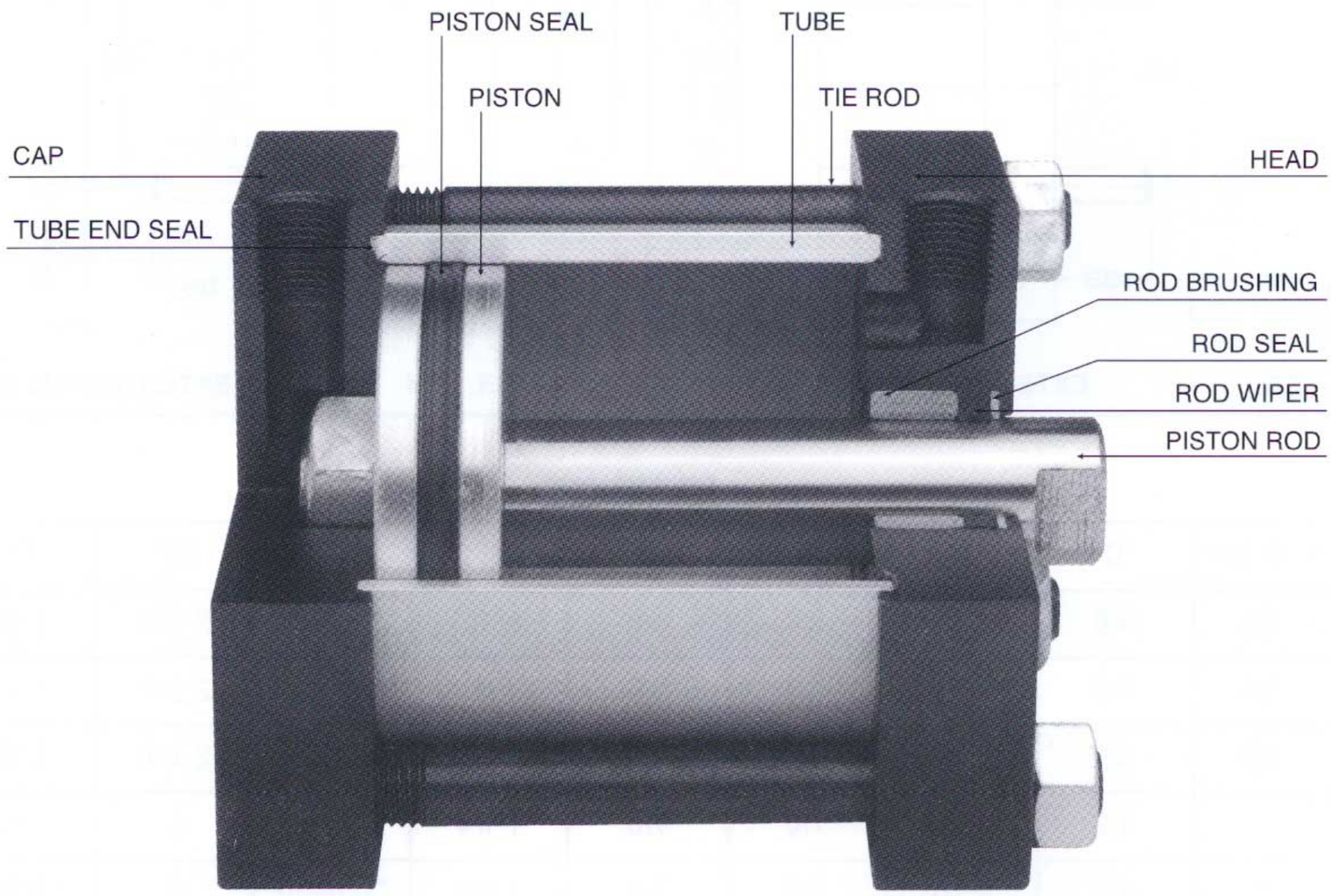

150 PSI AIR
250 PSI HYD. (NON-SHOCK)

CONSTRUCTION FEATURES OF S-SERIES CYLINDERS

1. Solid die cast aluminum alloy is used for heads and caps and then anodized for corrosion resistance.
2. Aluminum alloy tube 6063-T832 of 35,000 PSI that is hard coated on I.D. for file hard resistance to scoring and wear, yet light in weight.
3. Aluminum alloy piston for light weight and excellent friction characteristics against hard coated tube I.D.
4. Cast iron rod bushing that is compatible with hard chrome plated piston rod.
5. Hard chrome plated ground and polished piston rod of 100,000 PSI minimum yield.
6. Tie rods of high strength steel to maintain compression on tube end seals.
7. Piston seal and rod seal are of quad ring design. It requires lower squeeze than an o-ring for positive sealing. This four lobed seal provides low friction in dynamic applications and longer life.
8. Tube end seals of fiber and nitrile base elastomer as a binder.
9. All sliding surfaces are lubricated with a teflon base, low friction long lasting grease.
10. Teflon back-up washer for rod seal helps wipe piston rod clean on return stroke.

S-SERIES CYLINDER

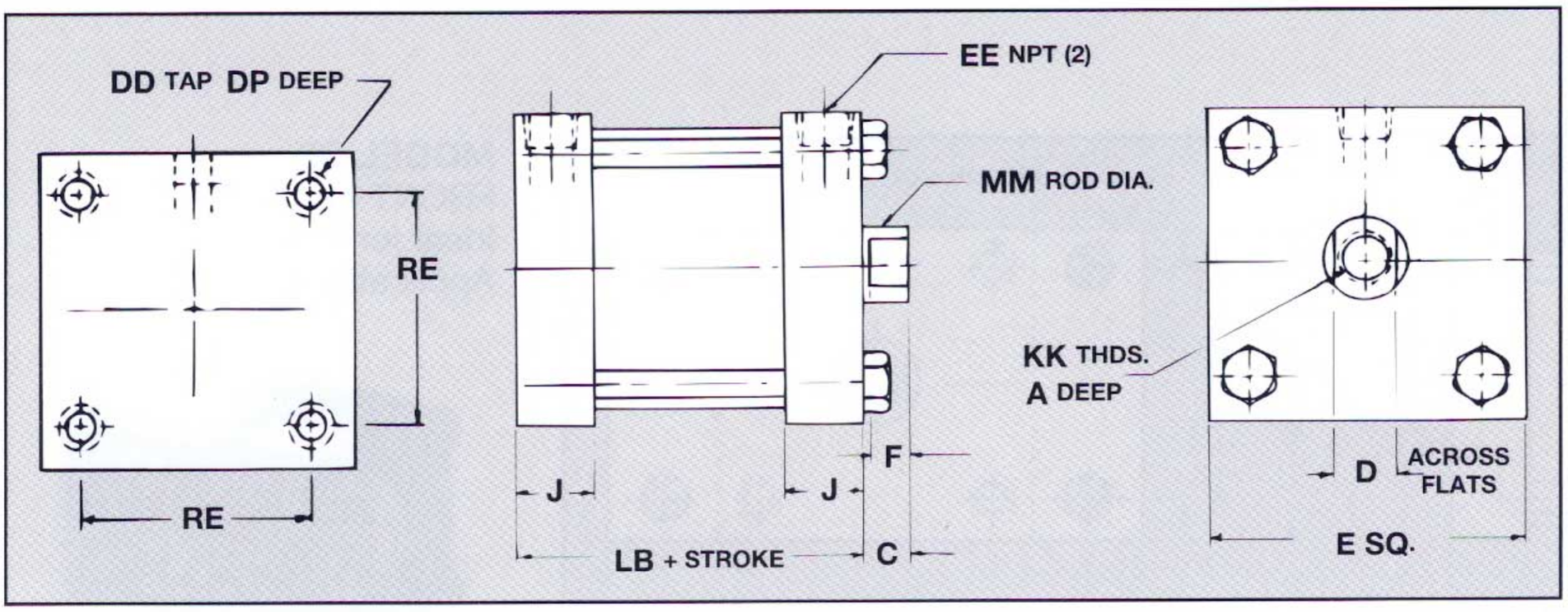

MODEL S
Basic Cylinder
Has Nuts at
Head End.
Nuts at Cap End
Also Available.

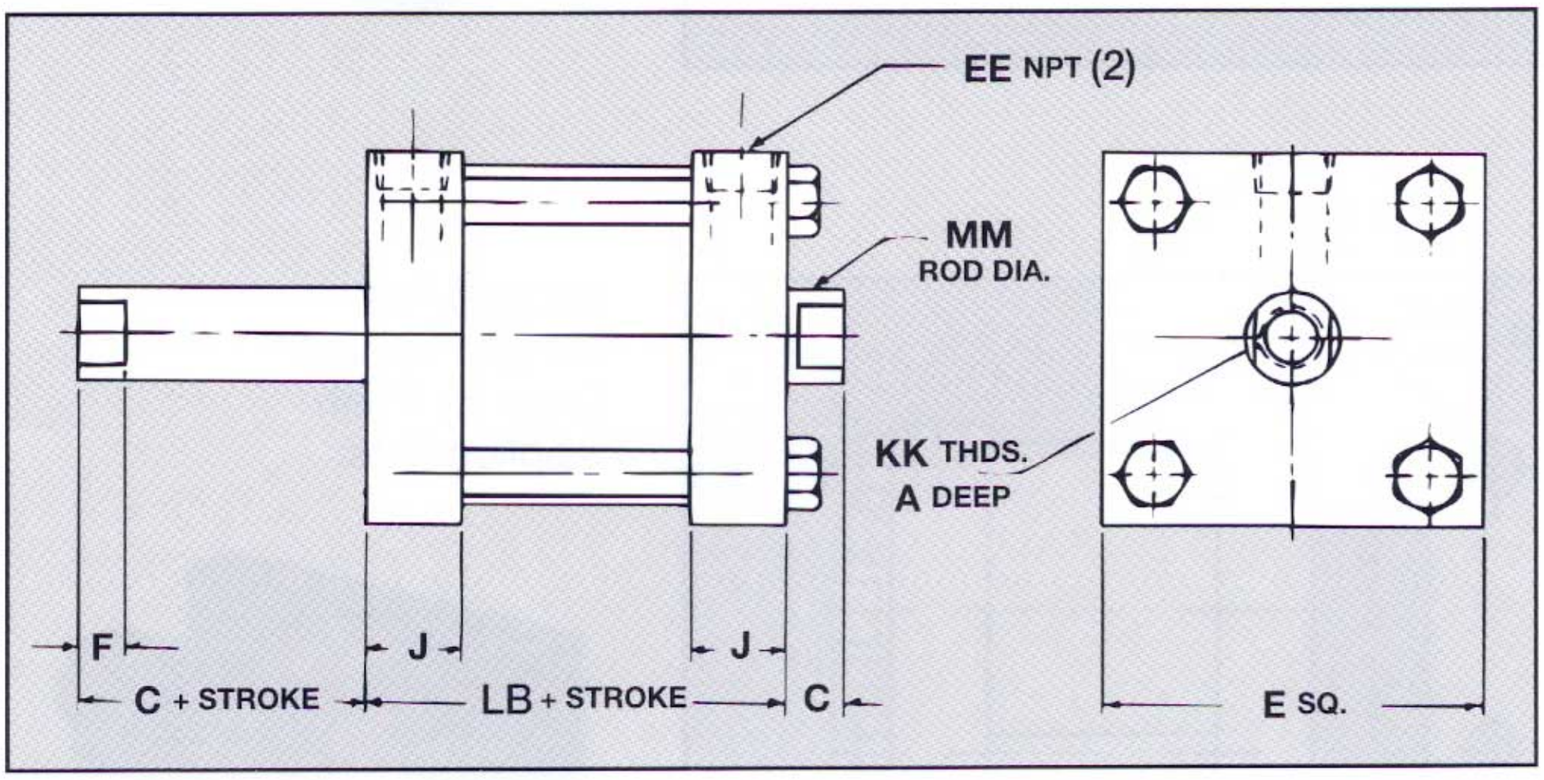

MODEL SD
Double Rod End
Cylinder

DOUBLE ROD END CYLINDER

DOUBLE ROD END CYLINDERS ARE DESIGNATED BY ADDING LETTER "D". (i.e. SFD, STD, etc.)
AVAILABLE IN ALL MODELS EXCEPT MODEL "SC"

BASIC AND DOUBLE ROD END CYLINDER DIMENSIONS

BORE	A	C	D	DD	DP	E	F	J	EE	KK	LB	MM	RE
1-1/2	5/8	3/8	1/2	1/4-28	5/16	2	5/16	5/8	1/8	3/8-24	1-3/4	5/8	1.43
2	5/8	3/8	1/2	5/16-24	5/16	2-1/2	5/16	5/8	1/8	3/8-24	1-3/4	5/8	1.84
2-1/2	5/8	3/8	1/2	5/16-24	5/16	3	5/16	5/8	1/8	3/8-24	1-3/4	5/8	2.19
3-1/4	7/8	1/2	13/16	7/16-20	7/16	3-3/4	7/16	7/8	1/4	5/8-18	2-1/2	1	2.94
4	7/8	1/2	13/16	7/16-20	7/16	4-1/2	7/16	7/8	1/4	5/8-18	2-1/2	1	3.56
5	7/8	1/2	13/16	1/2-20	1/2	5-1/2	7/16	1	3/8	5/8-18	2-3/4	1	4.10

FLANGE MOUNTS

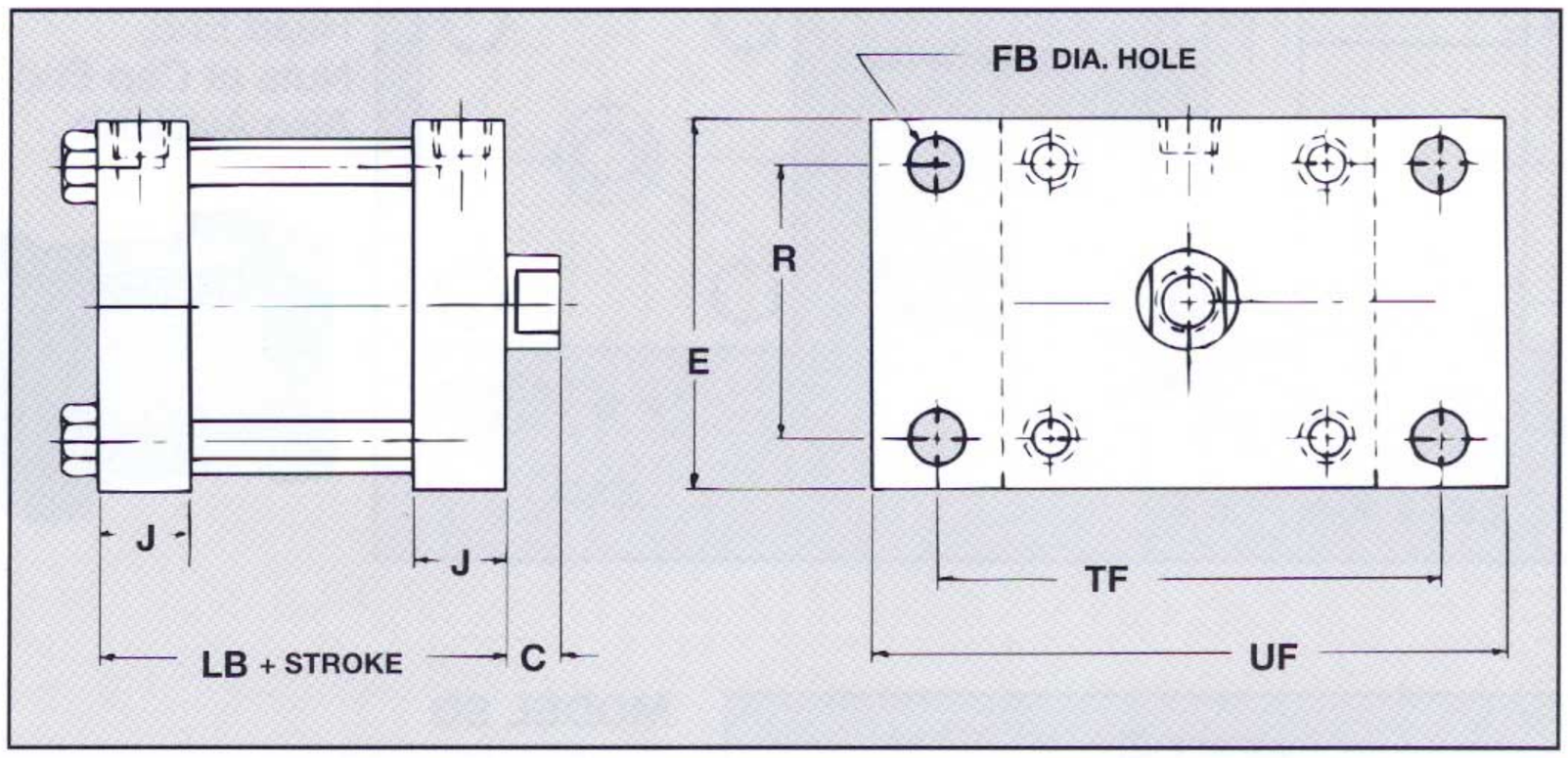

MODEL SF
FRONT FLANGE
Ideal for Pull Applications.

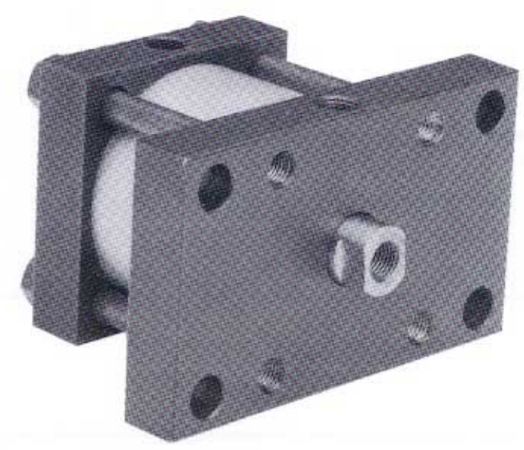

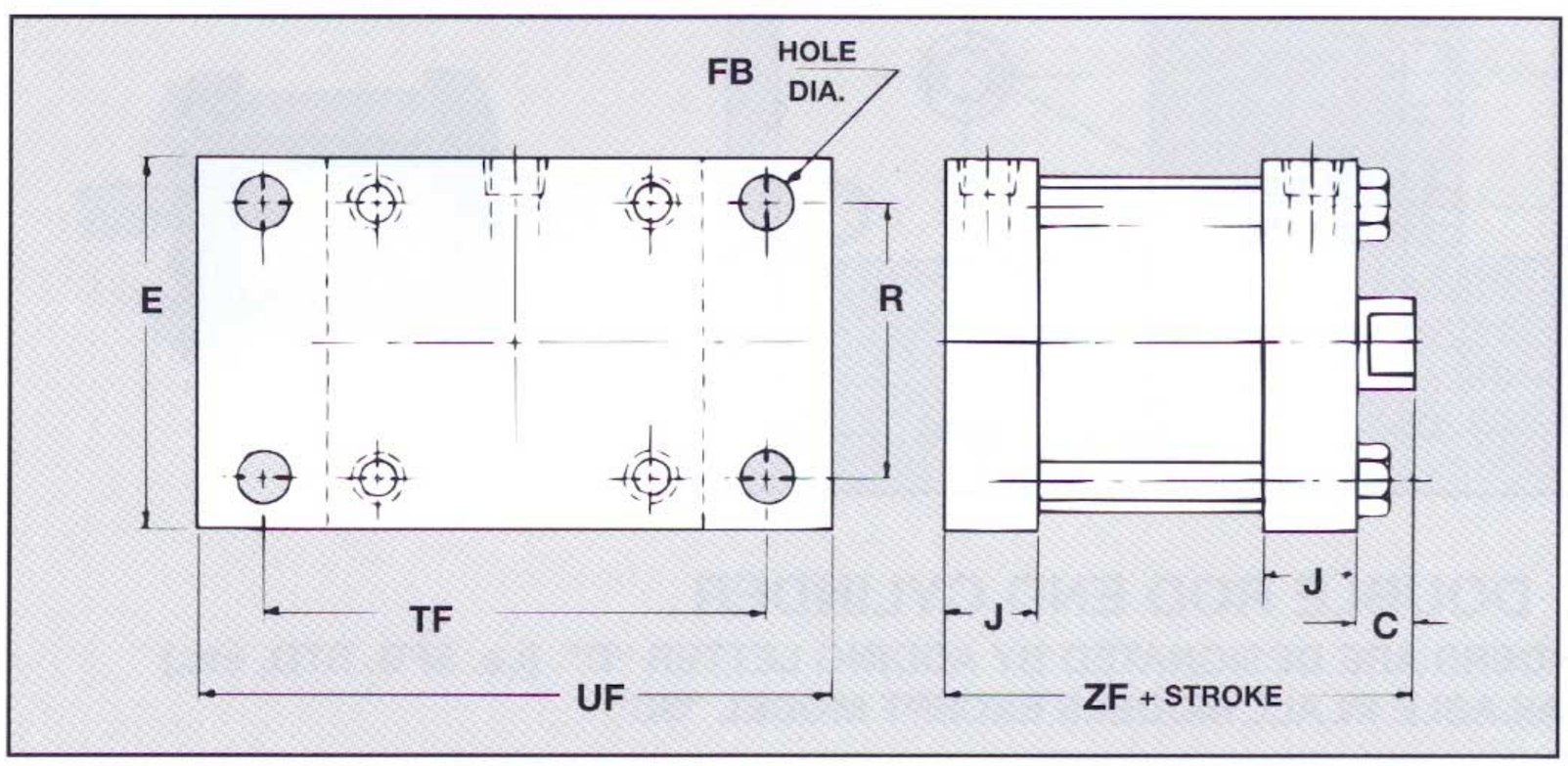

MODEL SR
REAR FLANGE
Ideal for Push Applications.

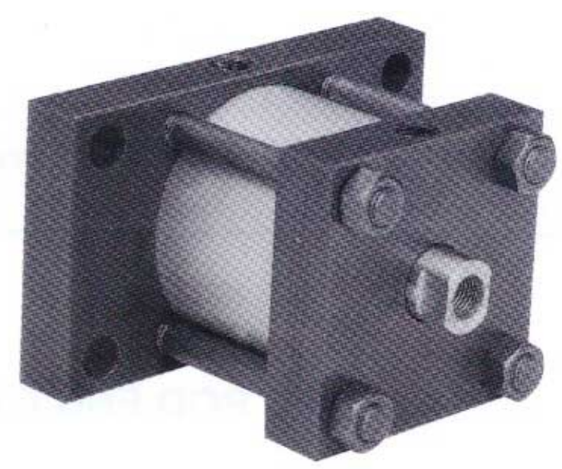

DIMENSIONS

BORE	C	E	J	R	FB	LB	TF	UF	ZF
1-1/2	3/8	2	5/8	1.43	5/16	1-3/4	2-3/4	3-3/8	2-1/8
2	3/8	2-1/2	5/8	1.84	3/8	1-3/4	3-3/8	4-1/8	2-1/8
2-1/2	3/8	3	5/8	2.19	3/8	1-3/4	3-7/8	4-5/8	2-1/8
3-1/4	1/2	3-3/4	7/8	2.76	7/16	2-1/2	4-11/16	5-1/2	3
4	1/2	4-1/2	7/8	3.32	7/16	2-1/2	5-7/16	6-1/4	3
5	1/2	5-1/2	1	4.10	9/16	2-3/4	6-5/8	7-5/8	3-1/4

BOTTOM TAP AND BOTTOM BAR MOUNTS

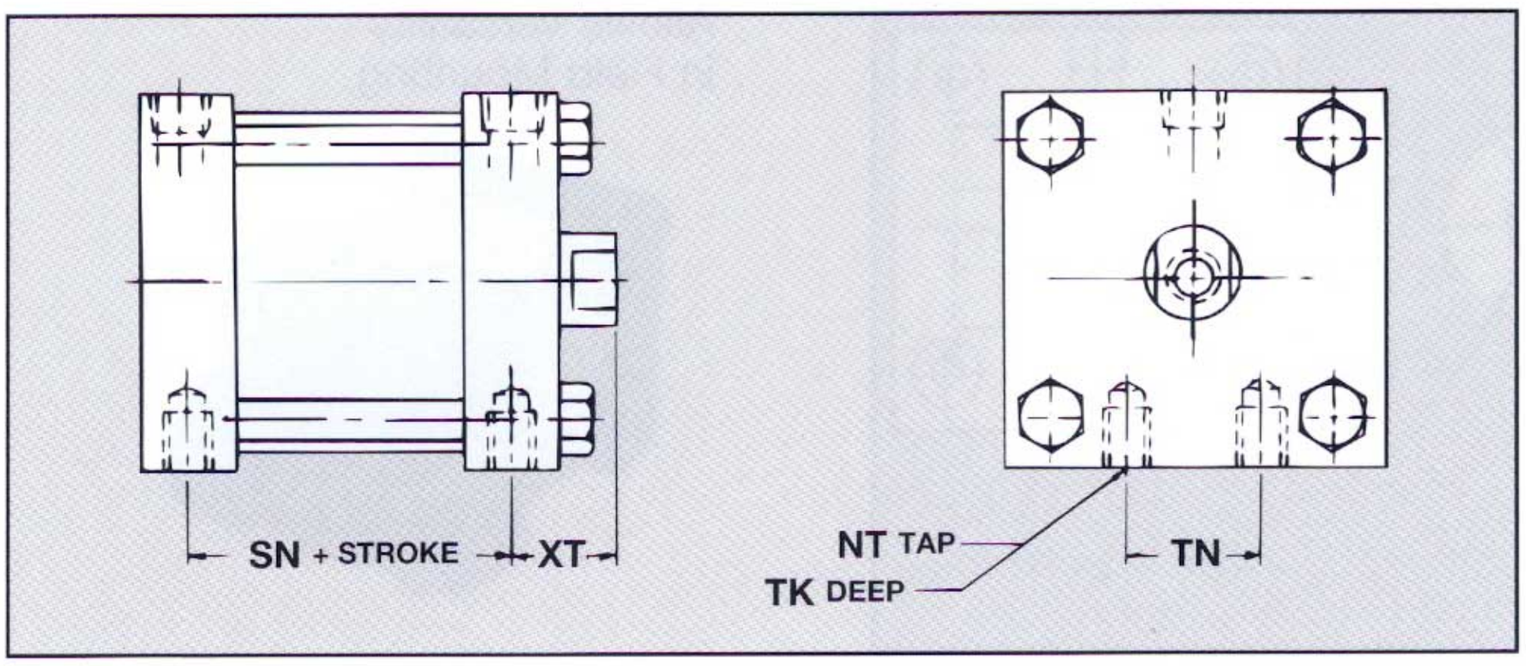

MODEL ST
BOTTOM TAP
For Mounting
From Under
Cylinder.

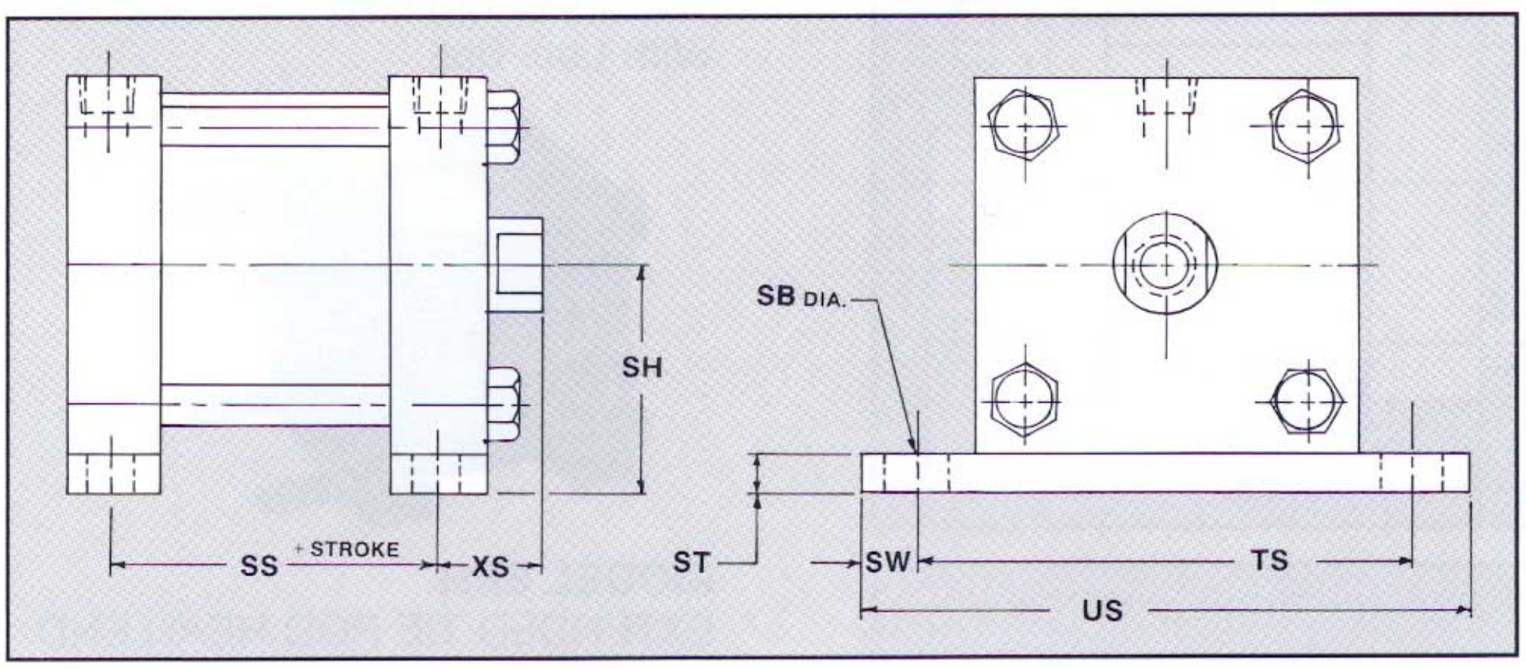

MODEL SB
BOTTOM BAR
For Mounting
From Side of
Cylinder.

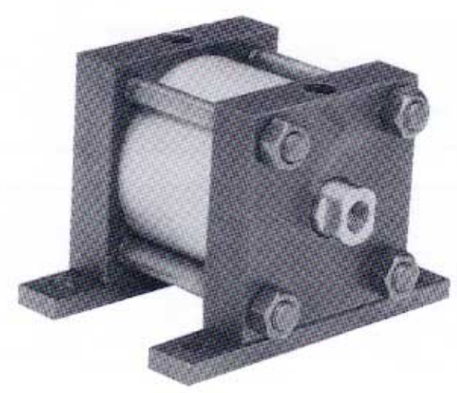

DIMENSIONS

BORE	NT	SB	SH	SN	SS	ST	SW	TK	TN	TS	US	XS	XT
1-1/2	1/4-20	5/16	1-1/4	1-1/8	1-1/8	1/4	3/8	3/8	5/8	2-3/4	3-1/2	11/16	11/16
2	1/4-20	5/16	1-1/2	1-1/8	1-1/8	1/4	3/8	3/8	7/8	3-1/4	4	11/16	11/16
2-1/2	5/16-18	3/8	1-13/16	1-1/16	1-1/16	5/16	3/8	1/2	1-1/4	3-3/4	4-1/2	23/32	23/32
3-1/4	3/8-16	1/2	2-3/8	1-1/2	1-1/2	1/2	1/2	5/8	1-1/2	4-3/4	5-3/4	1	1
4	3/8-16	1/2	2-3/4	1-1/2	1-1/2	1/2	1/2	5/8	2-1/16	5-1/2	6-1/2	1	1
5	1/2-13	1/2	3-1/4	1-3/4	1-3/4	1/2	1/2	3/4	2-11/16	6-1/2	7-1/2	1	1

CLEVIS AND EXTENDED TIE ROD MOUNTS

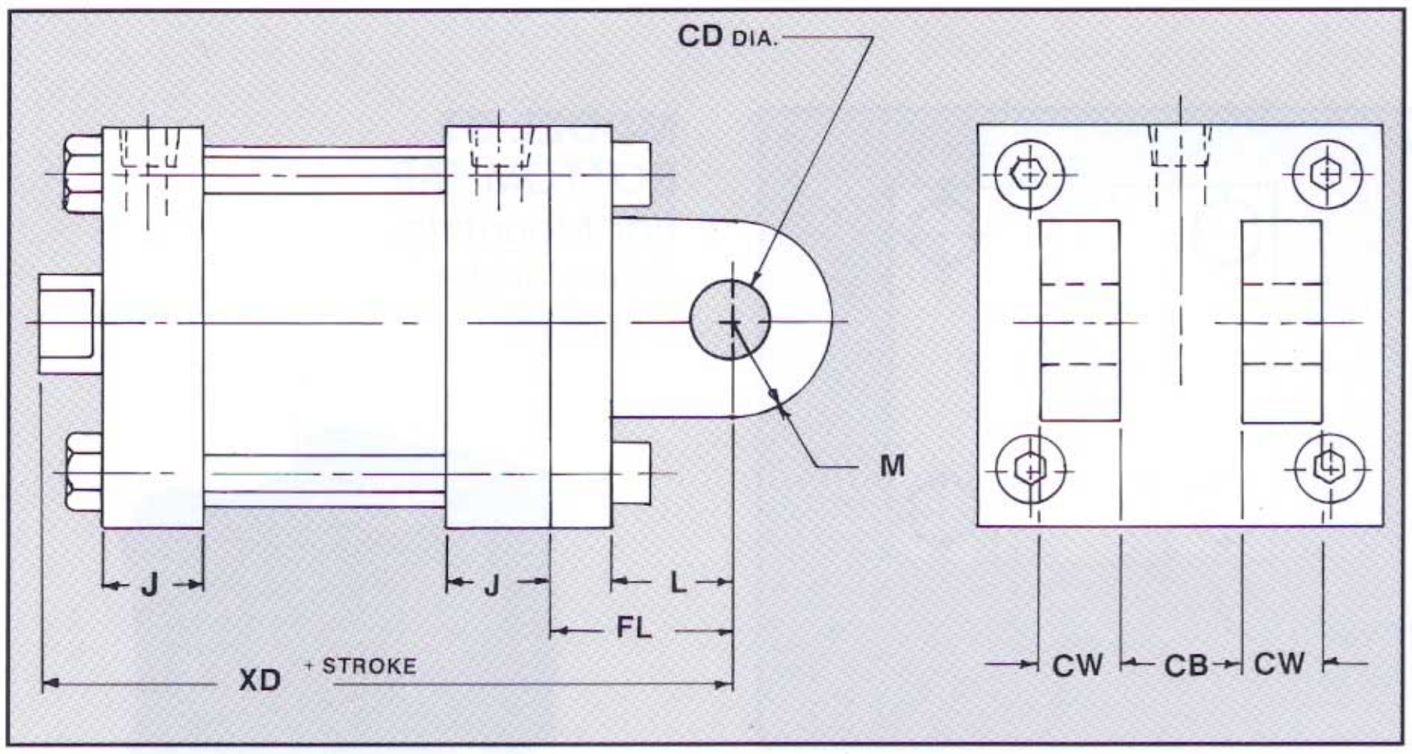

MODEL SC
DETACHABLE CLEVIS
Allows Versatility
in Field Mounting.

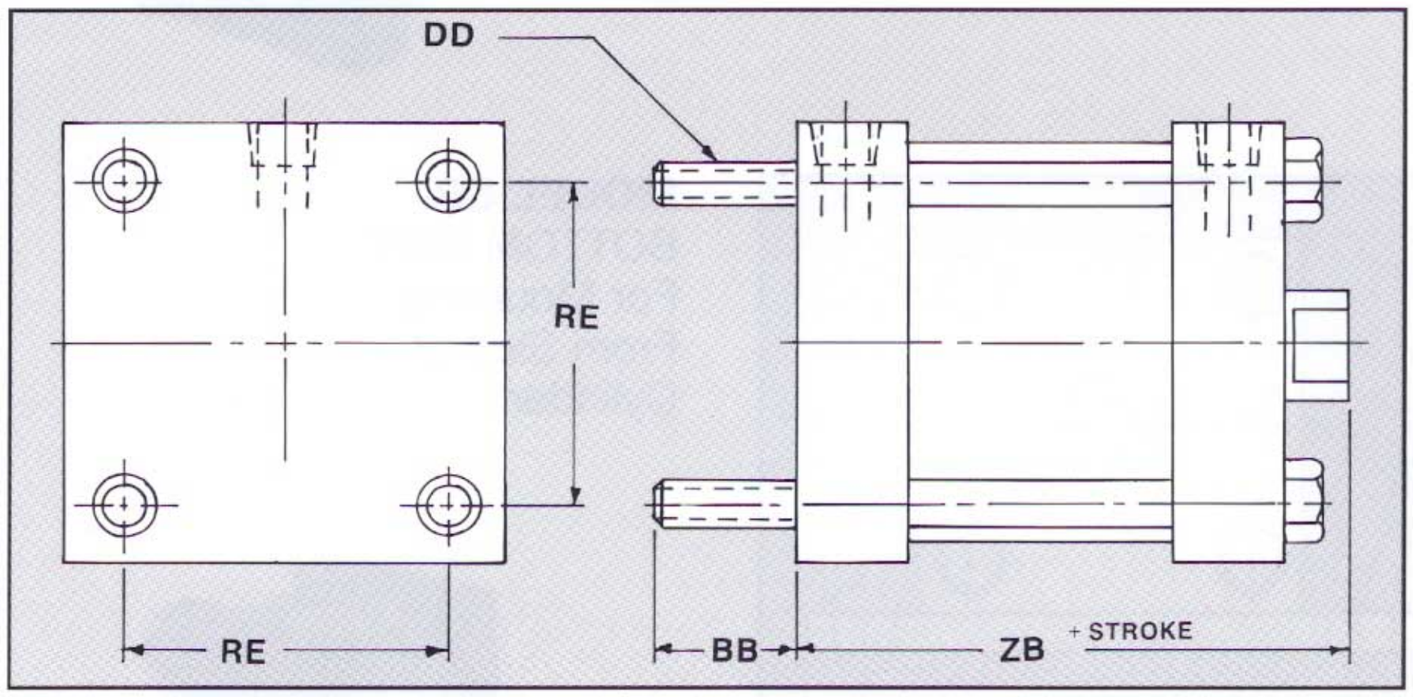

MODEL SEC
EXTENDED TIE ROD CAP END
Extensions are
Threaded into Cap
With Loc-Tite.

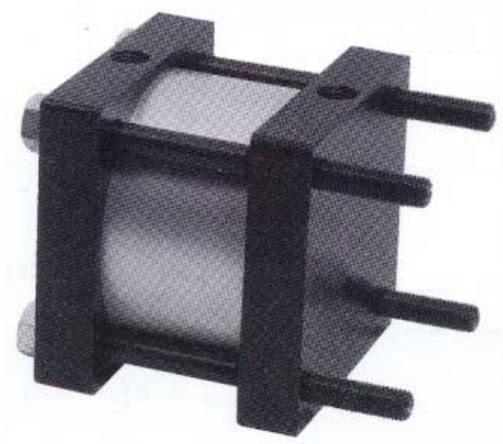

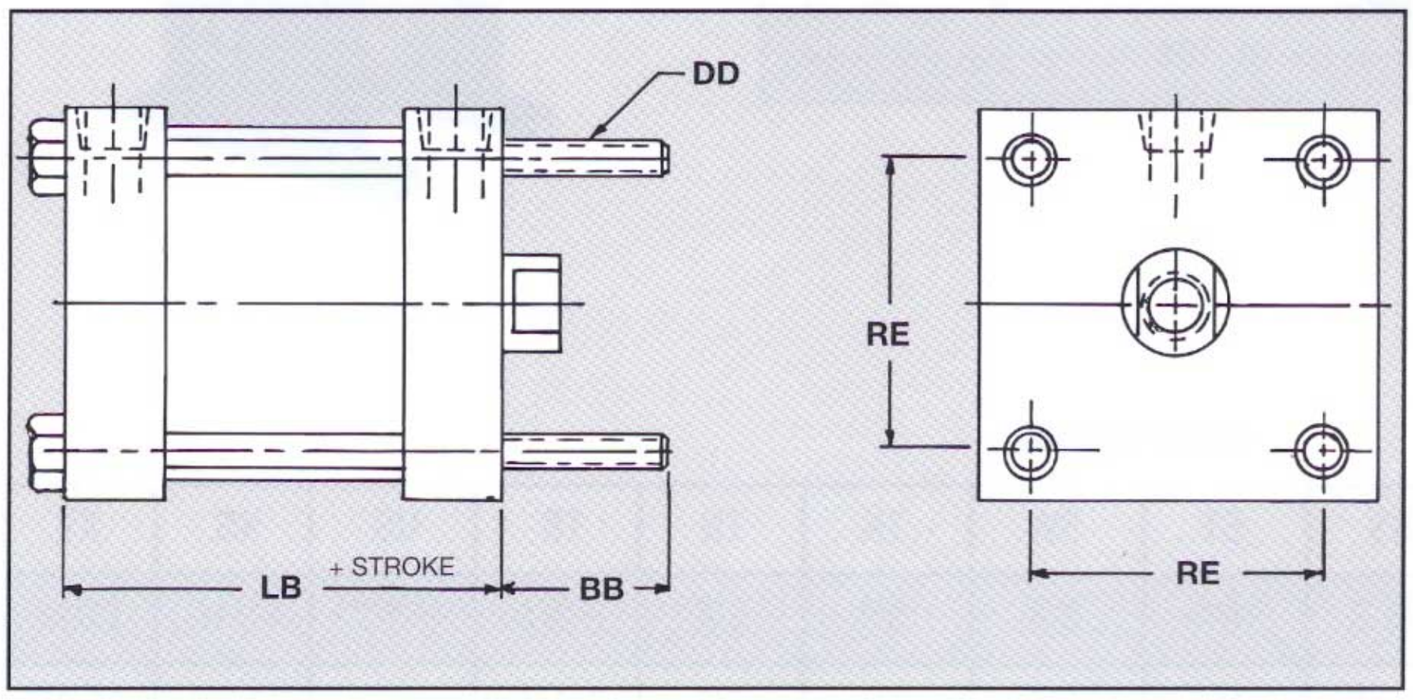

MODEL SEH
EXTENDED TIE ROD HEAD END
Extensions are
Threaded into Head
With Loc-Tite.

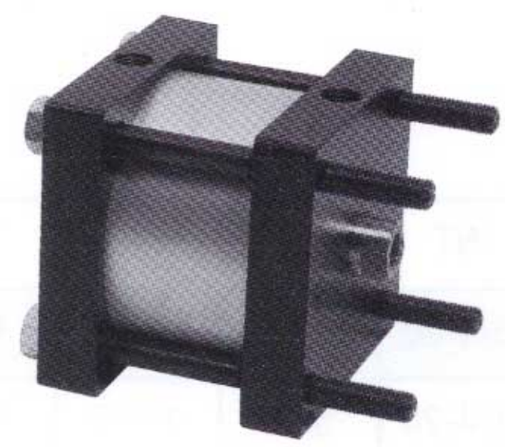

DIMENSIONS

BORE	J	L	LB	M	BB	CB	CD	CW	DD	FL	RE	XD	ZB
1-1/2	5/8	3/4	1-3/4	9/16	7/8	3/4	1/2	1/2	1/4-28	1-1/8	1.43	3-1/4	2-1/8
2	5/8	3/4	1-3/4	9/16	1	3/4	1/2	1/2	5/16-24	1-1/8	1.84	3-1/4	2-1/8
2-1/2	5/8	3/4	1-3/4	9/16	1	3/4	1/2	1/2	5/16-24	1-1/8	2.19	3-1/4	2-1/8
3-1/4	7/8	1-1/4	2-1/2	13/16	1-1/4	1-1/4	3/4	5/8	7/16-20	1-3/4	2.94	4-3/4	3
4	7/8	1-1/4	2-1/2	13/16	1-1/4	1-1/4	3/4	5/8	7/16-20	1-3/4	3.56	4-3/4	3
5	1	1-1/4	2-3/4	13/16	1-1/2	1-1/4	3/4	5/8	1/2-20	1-3/4	4.10	5	3-1/4

ACCESSORIES
COMMON TO BOTH SERIES

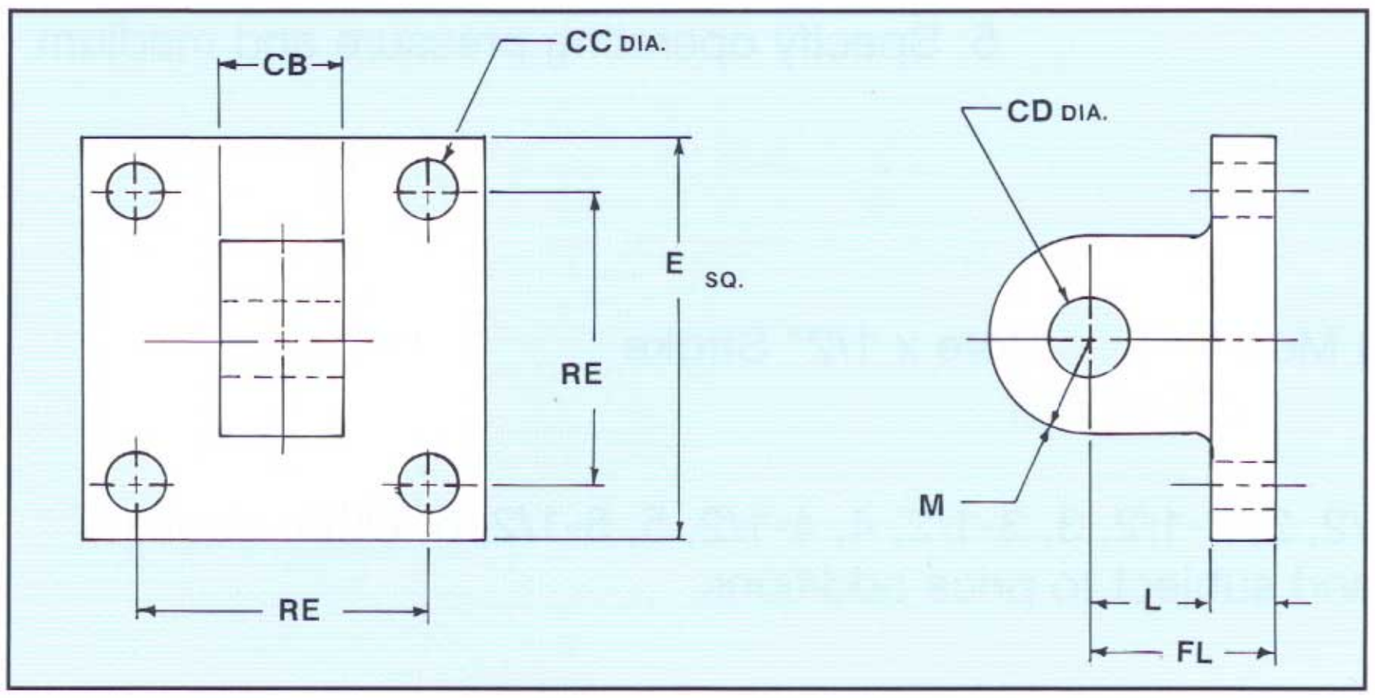

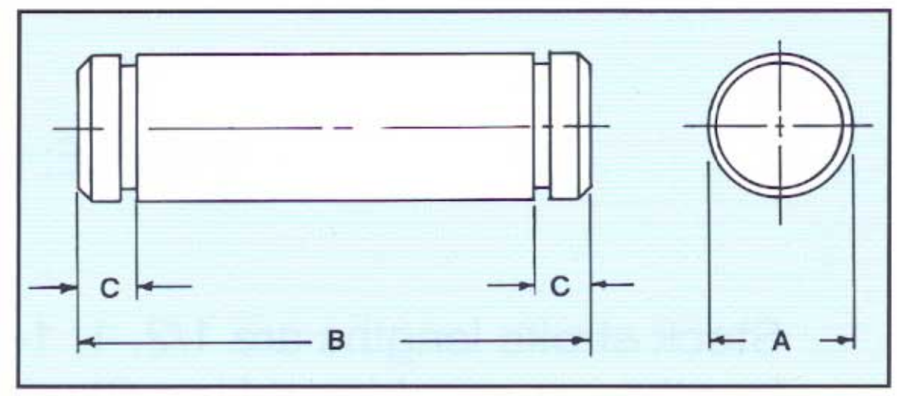

EYE MOUNTING BRACKET – CAST IRON

PART NO.	E	L	M	CB	CC	CD	FL	RE	USE WITH BORE
A-89-03	2-1/2	3/4	9/16	3/4	11/32	1/2	1-1/8	1.84	1-1/2, 2, 2-1/2
A-89-065	3-3/4	1-1/4	13/16	1-1/4	15/32	3/4	1-3/4	2.94	3-1/4, 4, 5
A-89-12	4-1/2	1-1/2	1	1-1/2	21/32	1	2-1/4	3.25	6, 8

CLEVIS PIN

PART NO.	A	B	C
A-98-03	.500	2-1/4	3/16
A-98-065	.750	3	3/16
A-98-12	1.000	3-1/2	3/16

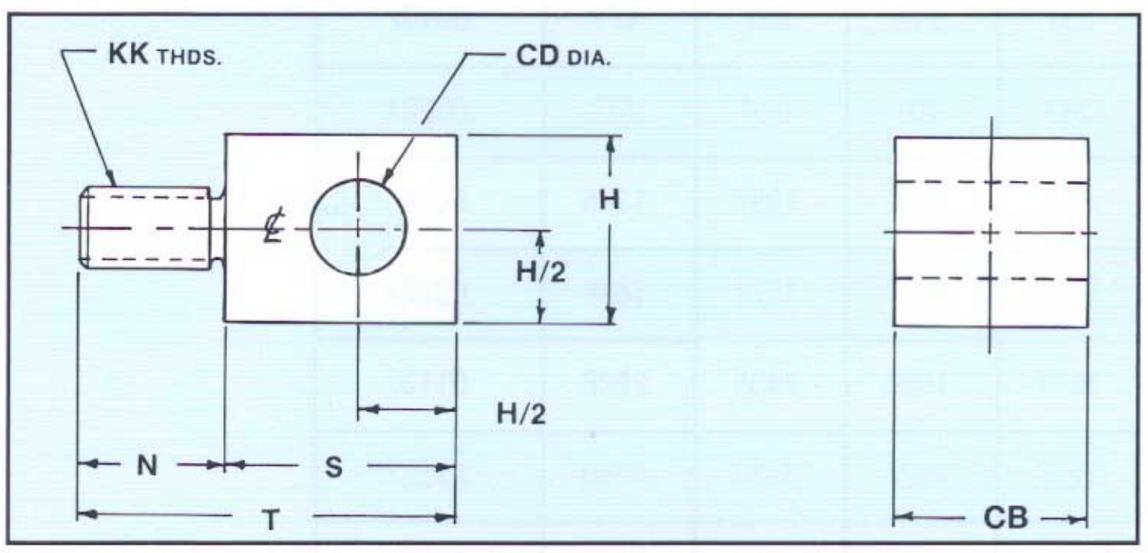

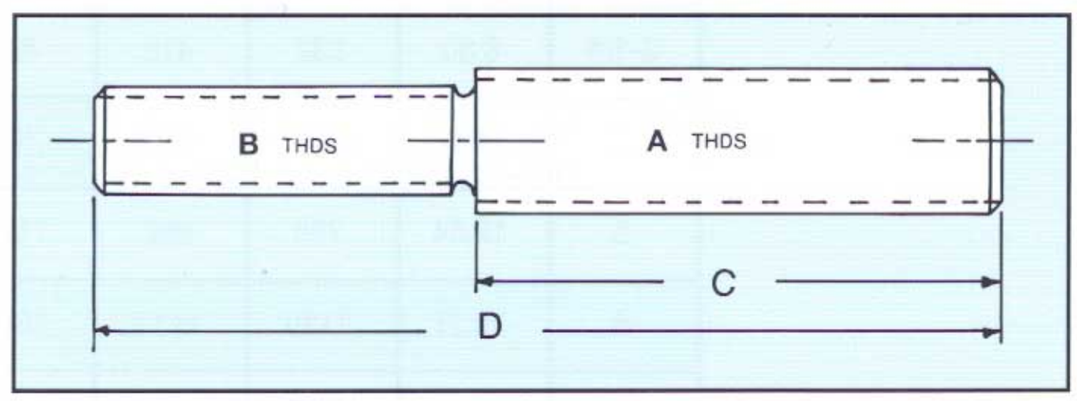

MALE ROD EYE – STEEL

PART NO.	H	N	S	T	CB	CD	KK
A-93-03	1	9/16	1-3/8	1-15/16	3/4	1/2	3/8-24
A-93-065	1-1/2	13/16	1-11/16	2-1/2	1-1/4	3/4	5/8-18

MALE ROD END STUD

USE WITH BORE
1-1/2, 2, 2-1/2
3-1/4, 4, 5
6, 8

PART NO.	A	B	C	D
A-95-03	7/16-20	3/8-24	3/4	1-5/16
A-95-065	3/4-16	5/8-18	1-1/8	1-15/16
A-95-12	1-14	1-14	0	3-1/8

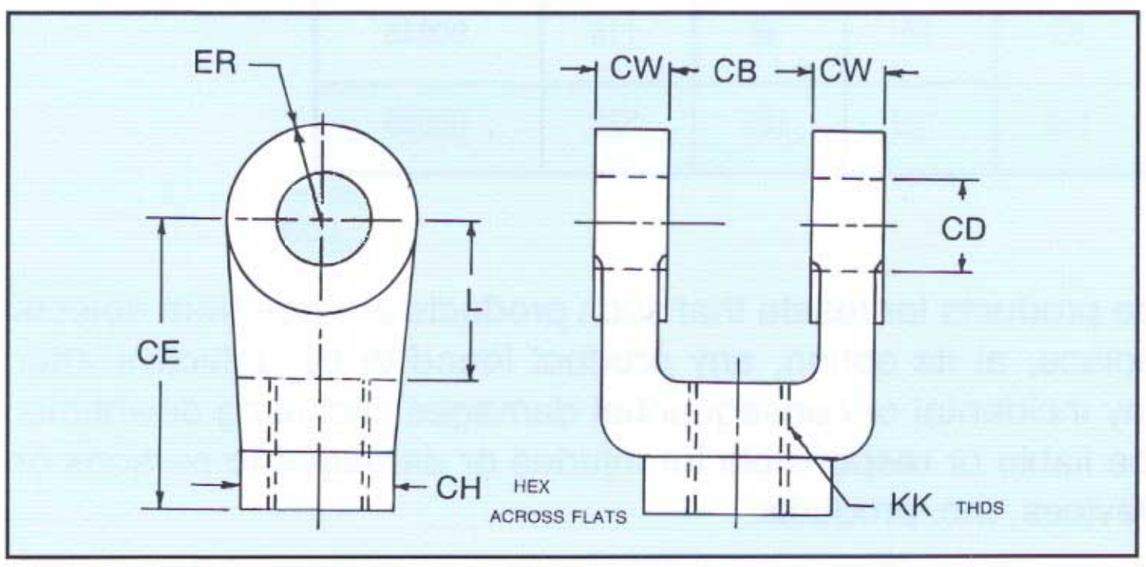

ROD CLEVIS – STEEL

PART NO.	CB	CD	CE	CH	CW	ER	KK	L	USE WITH
A-92-03	3/4	1/2	1-1/2	3/4	1/2	1/2	7/16-20	3/4	1-1/2, 2, 2-1/2
A-92-065	1-1/4	3/4	2-3/8	1-1/4	5/8	3/4	3/4-16	1-1/4	3-1/4, 4, 5
A-92-12	1-1/2	1	3-1/8	1-5/8	3/4	1	1-14	1-1/2	6, 8

ORDERING INFORMATION FOR S-SERIES

1. Specify quantity
2. Specify model
3. Specify bore and stroke
4. Specify accessories (if needed)
5. Specify operating pressure and medium

EXAMPLE: (3) Model SF 2" Bore x 1/2" Stroke
100 PSI AIR

Stock stroke lengths are 1/2, 1, 1-1/2, 2, 2-1/2, 3, 3-1/2, 4, 4-1/2, 5, 5-1/2, 6. Other stroke lengths are considered Non-Stock and subject to price additions.

FORCE & FLOW CHARTS

BORE	PISTON AREA	PSI							CU. FT. DISPLACEMENT PER IN. OF PUSH STROKE
		40	50	60	80	100	125	150	
1-1/2	1.77	71	88	106	142	177	221	266	.00102
2	3.14	126	157	189	251	314	392	471	.00182
2-1/2	4.91	196	246	295	393	491	614	737	.00284
3-1/4	8.30	332	415	498	664	830	1037	1245	.00480
4	12.57	503	629	754	1005	1257	1571	1886	.00727
5	19.64	785	982	1178	1571	1964	2455	2946	.01137
6	28.27	1130	1414	1696	2262	2827	3534	4240	.01637
8	50.26	2010	2513	3015	4020	5026	6280	7539	.02227

DEDUCT THESE FORCES FOR PULL STROKES

ROD DIA.	ROD AREA	PSI.							ROD. DISPLACEMENT IN CU. FT. PER IN. OF PULL STROKE
		40	50	60	80	100	125	150	
5/8	.307	12	15	18	25	31	38	46	.00018
1	.785	31	39	47	63	79	98	118	.00045
1-3/8	1.485	59	74	89	119	149	185	222	.00086

Warranty:

Rockford Air Devices, Inc. warrants to customers who purchase products for resale that such products are free from defects in material and workmanship. The company will repair or replace, at its option, any product found to be defective after inspection. Rockford Air Devices, Inc. shall not be liable for any incidental or consequential damages, including downtime, for breach of any express or implied warranty, and shall not be liable or responsible for injuries or damages to persons or property arising out of the use or operation of Rockford Air Devices, Inc. products.

POWER MULTIPLIERS

More force in a smaller mounting space

ORDERING INFORMATION

1. Number of stages required
2. Specify series
3. Mount required (see st'd catalog)◆
4. Specify bore & stroke
5. Specify push or pull*
6. Line pressure being used

EXAMPLE

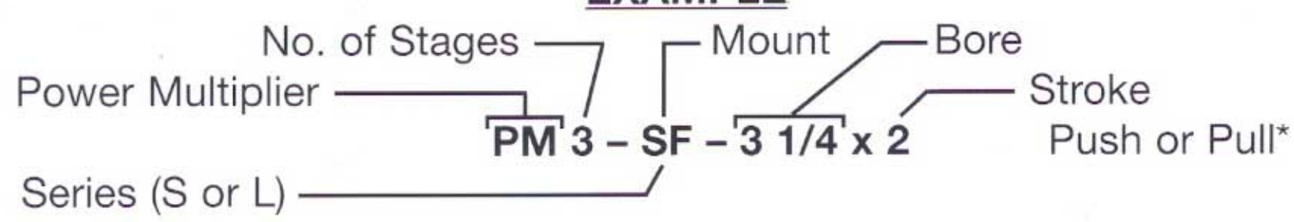

100 PSI MAX - AIR OR HYD.

Multiply line pressure by effective area to find total force.

BORE	STAGES			EFF AREA	S SERIES A	L SERIES A	B	C
1-1/2	2			3.22	2-7/8	3-7/8	2	3/8
		3		4.68	4	5-1/2		
			4	6.15	5-1/8	7-1/8		
2	2			5.97	2-7/8	3-7/8	2-1/2	3/8
		3		8.81	4	5-1/2		
			4	11.64	5-1/8	7-1/8		
2-1/2	2			9.51	2-7/8	3-7/8	3	3/8
		3		14.11	4	5-1/2		
			4	18.71	5-1/8	7-1/8		
3-1/4	2			15.80	4-1/8	5-1/8	3-3/4	1/2
		3		23.31	5-3/4	7-1/4		
			4	30.82	7-3/8	9-3/8		
4	2			24.34	4-1/8	5-1/8	4-1/2	1/2
		3		36.12	5-3/4	7-1/4		
			4	47.90	7-3/8	9-3/8		
5	2			38.48	4-1/2	5-1/2	5-1/2	1/2
		3		57.33	6-1/4	7-3/4		
			4	76.18	8	10		
6	2			55.06	–	6-3/4	6-1/2	5/8
		3		81.85	–	9-5/8		
			4	108.64	–	12-1/2		
8	2			99.04	–	6-3/4	8-1/2	5/8
		3		147.82	–	9-5/8		
			4	196.60	–	12-1/2		

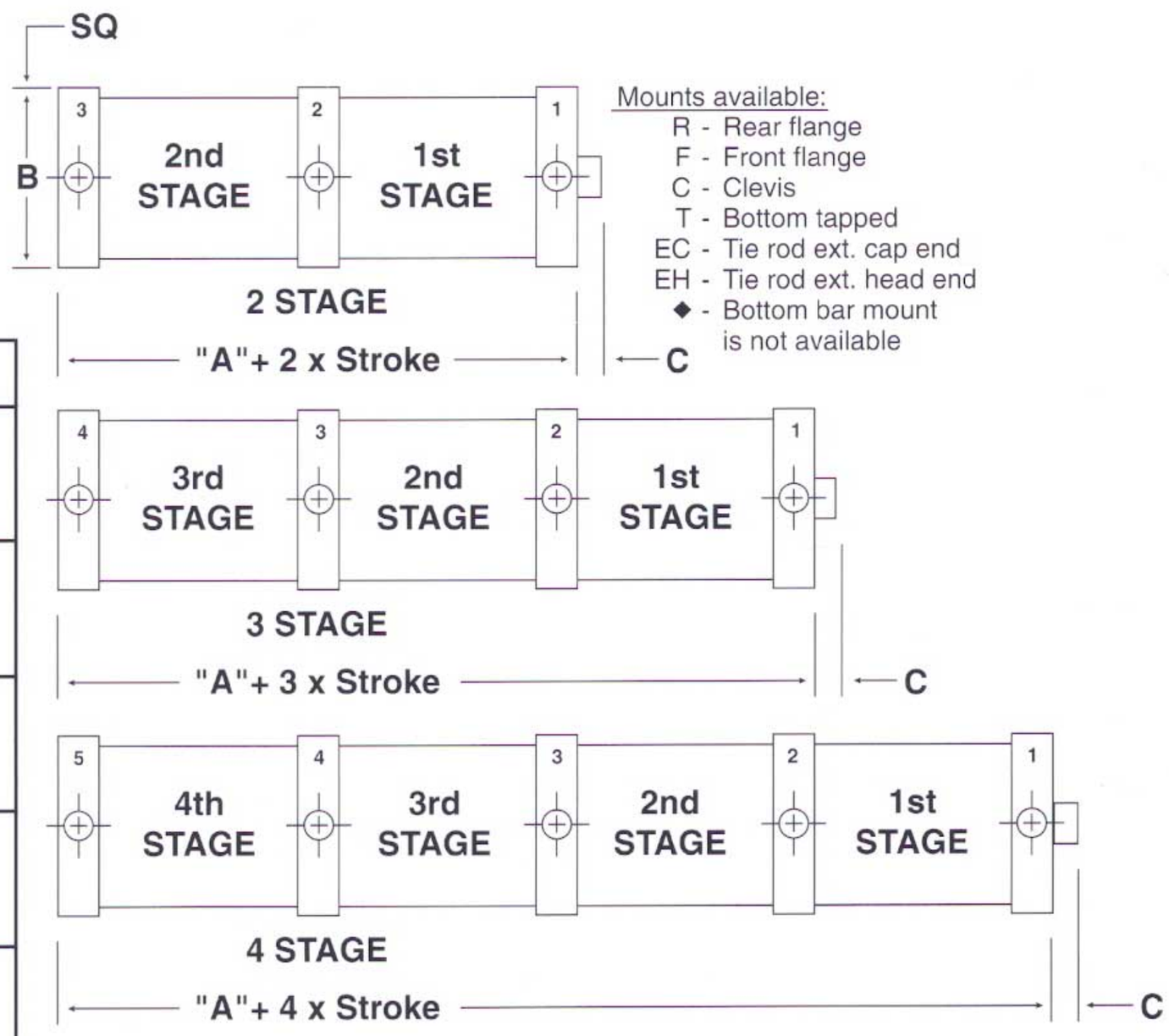

Mounts available:
- R - Rear flange
- F - Front flange
- C - Clevis
- T - Bottom tapped
- EC - Tie rod ext. cap end
- EH - Tie rod ext. head end
- ◆ - Bottom bar mount is not available

S - SERIES HAVE QUAD RING PISTON SEALS
L - SERIES HAVE LIP TYPE PISTON SEALS

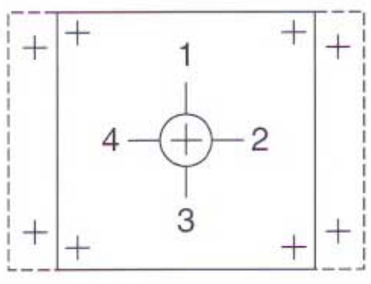

PORT POSITIONS

1. All mounts will have operational ports in pos. #1.
2. **T** mounts will have vents in pos. #2.
3. All other mounts will have vents in pos. #3.

NON-ROTATING PISTON ROD

Resist rotation and torque inherent to reciprocating cylinder motion.
When repeated positioning is required.

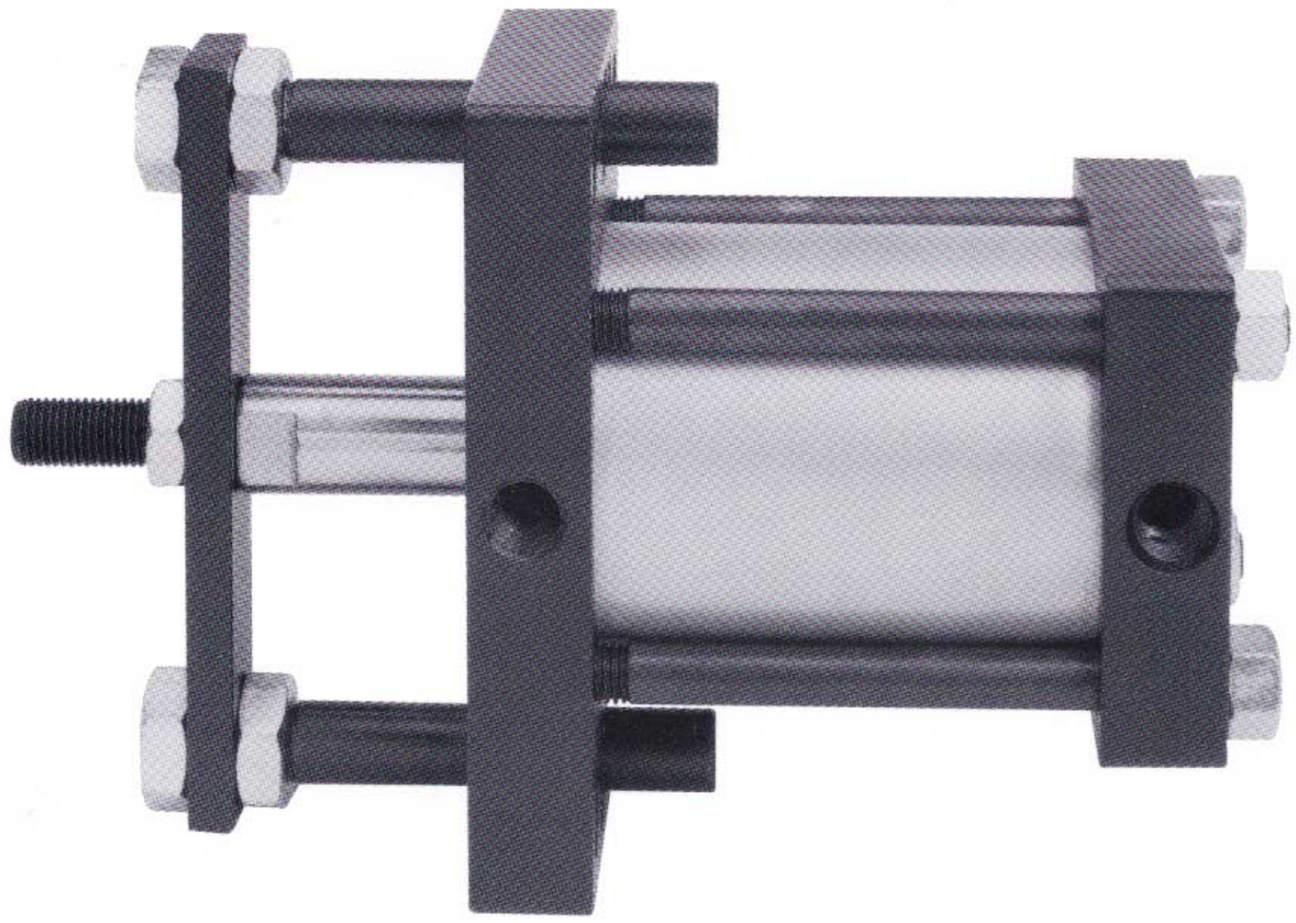

DESIGN FEATURES

1. Simple centerline design allows easy attachment to cylinder function.
2. Uses standard piston, piston rods, bushings & bushing seals.
3. Exceptionally wide positioned guide rods to resist maximum torque, gives more accurate repeatability.
4. Cost less than other non-rotating devices.

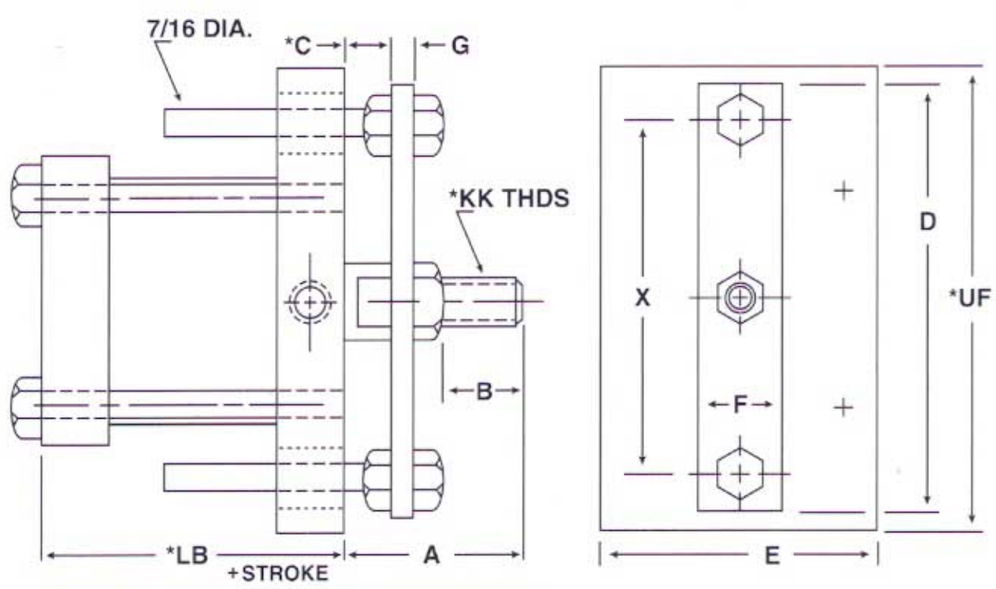

* THESE ARE STANDARD CATALOG DIMENSIONS

ORDERING INFORMATION

Non-rotating — Mount — Bore

NR - SR - 2 x 2

Series (S or L) — Stroke

Mounts available:

- R - Rear flange
- F - Front flange*
- C - Clevis
- T - Bottom tapped
- EC - Ext. rods-cap end

*MOUNTING SURFACE MUST BE CUT OUT TO ALLOW SPACE FOR GUIDE BAR AND GUIDE RODS.

BORE	A	B	C	D	E	F	G	KK	S Series LB	L Series LB	UF	X
1-1/2	1-5/8	3/4	3/8	3-3/8	2	3/4	1/4	3/8-24	1-3/4	2-1/4	3-3/8	2-3/4
2	1-5/8	3/4	3/8	4-1/8	2/1/2	3/4	1/4	3/8-24	1-3/4	2-1/4	4-1/8	3-3/8
2-1/2	1-5/8	3/4	3/8	4-5/8	3	3/4	1/4	3/8-24	1-3/4	2-1/4	4-5/8	3-7/8
3-1/4	2-3/8	1-1/8	1/2	5-1/2	3-3/4	1	3/8	5/8-18	2-1/2	3	5-1/2	4-5/8
4	2-3/8	1-1/8	1/2	6-1/4	4-1/2	1	3/8	5/8-18	2-1/2	3	6-1/4	5-3/8
5	2-3/8	1-1/8	1/2	7-5/8	5-1/2	1	3/8	5/8-18	2-3/4	3-1/4	7-5/8	6-5/8
6	2-15/16	1-1/4	5/8	8-5/8	6-1/2	1-1/2	1/2	1-14	–	3-7/8	8-5/8	7-5/8

NOTE: Internal non-rotating construction available in 3-1/4" bore through 8" bore.

AIR - OIL TANKS

LIGHTWEIGHT AIR - OIL TANK

150 PSI AIR

Aluminum end caps, translucent fiberglass tube allows easy viewing of oil height from any position.

ORDERING INFORMATION

AIR-OIL TANK

DIAMETER

LENGTH IN INCHES

AOT – 3 1/4" x 6"

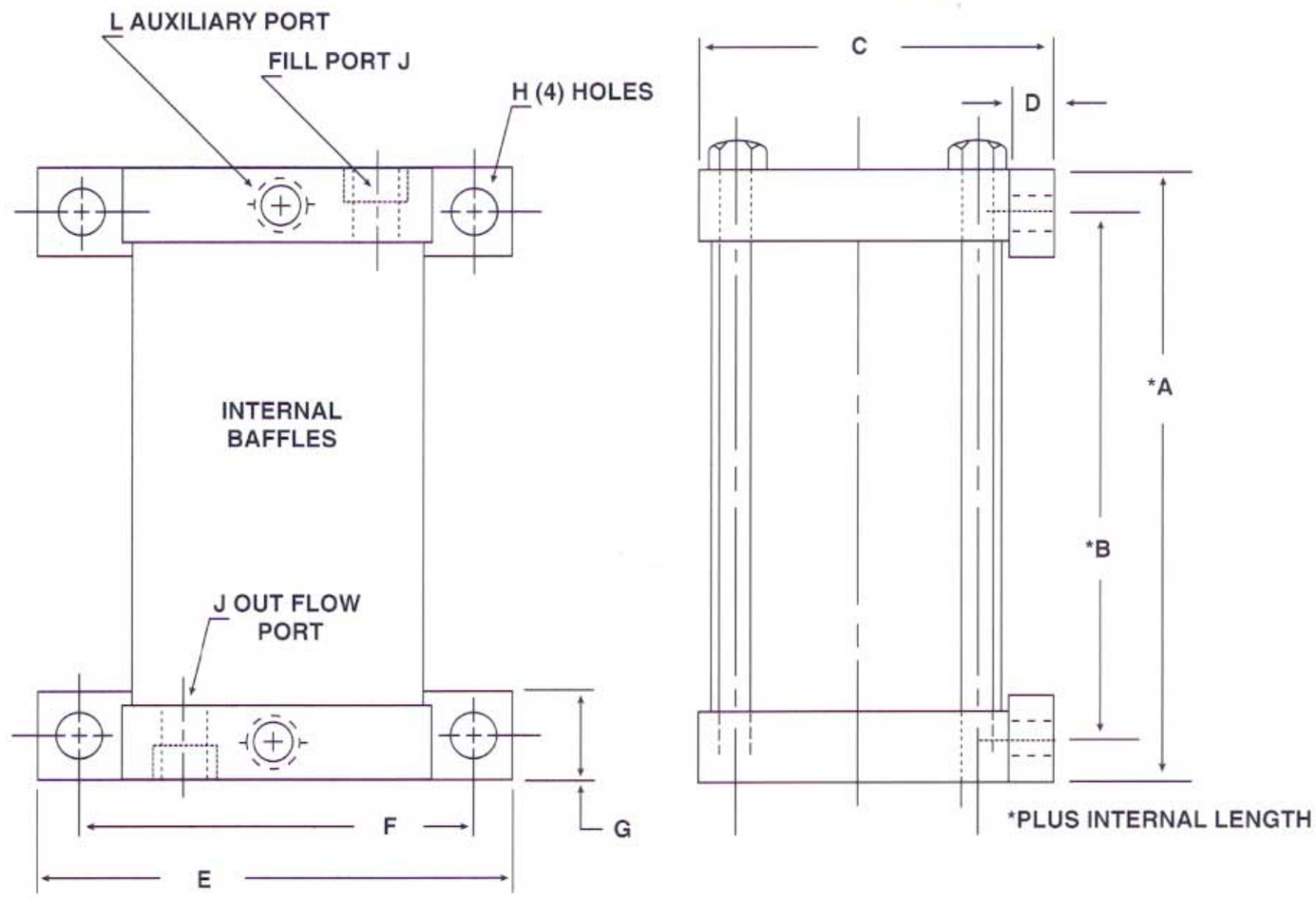

DIMENSIONS OF AIR-OIL TANKS

PART NO.	DIA.	A	B	C	D	E	F	G	H	J	L
AOT	2-1/2	1-1/4	9/16	3-5/16	5/16	4-1/2	3-3/4	3/4	3/8	1/4	1/8
AOT	3-1/4	1-3/4	3/4	4-1/4	1/2	5-3/4	4-3/4	1	1/2	3/8	1/4
AOT	4	1-3/4	3/4	6	1/2	6-1/2	5-1/2	1	1/2	3/8	1/4
AOT	5	2	1	6	1/2	7-1/2	6-1/2	1	1/2	1/2	3/8
AOT	6	2	1	7	1/2	8-1/2	7-1/2	1	1/2	3/4	3/8
AOT	8	2	1	9	1/2	10-1/2	9-1/2	1	1/2	3/4	3/8

MAXIMUM USEABLE VOLUME

		INTERNAL LENGTH OF TANK							
DIA.	AREA	6	8	10	12	14	16	18	20
2-1/2	4.9	15	24	33	42	51	60	69	78
3-1/4	8.30	26	41	56	71	86	101	116	131
4	12.56	38	62	84	108	130	153	174	198
5	19.64	57	92	128	163	199	234	269	305
6	28.27	84	131	184	237	285	340	388	436
8	50.26	146	236	327	417	507	597	687	778

NOTE: OTHER INTERNAL LENGTHS ARE AVAILABLE.
PLEASE CONTACT FACTORY

REED, PNP & NPN SWITCHES

SPECIFICATIONS

1. L-6200R is a normally open reed switch that operates from 5-240 VAC/VDC.
2. L-6200P is a normally open, sourcing - PNP, switch that operates from 5-28 VDC.
3. L-6200N is a normally open, sinking - NPN, switch that operates from 5-28 VDC.

TECHNICAL INFORMATION

Working temperature	Min. -10° C Max. 70° C	Shock resistance	30g (REED) 50g (PNP & NPN)
		Magnetic Requirement	85 Gauss
Enclosure Rating	IP 67(NEMA 6)		
		Maximum switch current	1 AMP
Vibration Resistance	9g	Stroke limitations: (2) switches require 1" min. stroke (1) switch requires ½" min. stroke	

All switches have 3 meter (118 inch) PVC cables, optional M8x1 male quick disconnect with 150mm (6 inch) cable also available

NOTE: 1 1/2" bores that require bumpers along with magnetic piston will be 1/2" longer plus special pricing.

MAGNETIC PISTON AVAILABLE IN L-SERIES ONLY.

RAD Rockford Air Devices Inc.

1201 TURRET DRIVE
MACHESNEY PARK, IL 61115

P.O. BOX 2497
LOVES PARK, IL 61132

PHONE (815) 654-3330 • FAX (815) 654-0847